CX50 JR



CHAMPIONS START HERE.™

Owners
Parts
Service
Tuning

For **parts orders**, contact your local dealer.

To locate your closest Cobra dealer, log on to
www.cobramoto.com
or call
+1 (517) 437 - 9100

Cobra MOTO, LLC
240 Uran Road
Hillsdale, MI 49242
USA

DISCLAIMER OF WARRANTY

This motorcycle is sold "as is" with all faults, obvious or not. There are no warranties expressed or implied, including any warranty of merchantability and warranty of fitness for any particular purpose.

Motorcycles are generally not covered by homeowner or trailer content insurance, and they typically require their own policy. Contact your own insurance company for specific details.

WARNING

THE COBRA CX50JR IS A COMPETITION MODEL ONLY AND IS NOT MANUFACTURED FOR, NOR SHOULD IT BE USED ON PUBLIC STREETS, ROADS OR HIGHWAYS.

THE USE OF THIS BIKE SHOULD BE LIMITED TO PARTICIPATION IN SANCTIONED COMPETITION EVENTS UPON A CLOSED COURSE BY A SUFFICIENTLY SKILLED RIDER AND SHOULD NOT BE USED FOR GENERAL OFF-ROAD RECREATIONAL RIDING.

IMPROPER USE OF THIS MOTORCYCLE CAN CAUSE INJURY OR DEATH.

THIS BIKE IS INTENDED FOR EXPERIENCED RACERS ONLY AND NOT FOR BEGINNERS.

IT IS YOUR RESPONSIBILITY AS THE OWNER OF THIS COBRA MOTORCYCLE OR AS THE PARENT, OR LEGAL GUARDIAN OF THE OPERATOR, TO KEEP THIS COBRA MOTORCYCLE IN PROPER OPERATING CONDITION.

THIS BIKE WAS DESIGNED FOR RIDERS THAT WEIGH LESS THAN 80 LBS WITH FULL RIDING GEAR AND SHOULD NOT BE OPERATED BY RIDERS THAT WEIGH MORE.

BE SURE THAT THE RIDER ALWAYS WEARS ADEQUATE SAFETY GEAR EVERYTIME HE OR SHE RIDES THEIR COBRA MOTORCYCLE.

IMPORTANT SAFETY NOTICE

⚠ WARNING

Failure to follow WARNING instructions could result in severe injury or death to the machine operator, a bystander, or a person inspecting or repairing the machine.

CAUTION:
A CAUTION indicates special precautions that must be taken to avoid damage to the machine.

NOTE: A NOTE provides key information to make procedures easier or clearer.

MCCJ2025.7

Table of Contents

General Information 6
Specifications - General 6
Optional Suspension Components 7
Specifications - Torque Values 7
Break-In Procedure 10
Starting Procedure 11
Maintenance 12
Tips 12
Schedule 13
Replacing Transmission / Clutch Lubricant 14
Proper Chain adjustment 15
Rear Brake Maintenance 15
Air Filter Cleaning 17
Fork Maintenance 17
Fork Air Bleeding 19
Fork Oil Replacement 19
Cobra Frictional Drive (V3 CFD) 20
Throttle cable strain relief 21
Parts 22
Parts – Airbox and Inlet System 22
Parts – Bars and Controls 23
Parts – Carburetor 24
Parts – Coolant System 24
Parts – Electrical System 26
Parts – Engine – Bottom End and Transmission 27
Parts – Engine Clutch and Kick Lever 29
Parts – Engine – Water Pump 31
Parts – Engine – Top End 32
Parts – Exhaust System 33
Parts – Forks & Triple Clamps 34
Parts – Forks – Leg Assembly – Brake Side 36
Parts – Forks – Leg Assembly – Non-Brake Side 38
Parts – Frame – Mounting Hardware I 40
Parts – Front Brakes 41

Parts – Front Wheel 41
Parts – Plastic & Seat 43
Parts – Rear Brake 45
Parts – Rear Wheel 47
Parts – Shock 48
Parts – Shock - Internal 49
Parts – Swingarm Assembly 50
Service 51
Engine Service 51
Base Gasket Selection 52
CFD Adjustment 54
Engine Removal 54
Complete Engine Disassembly Procedure 55
Top End Disassembly Procedure 55
Splitting the Cases 56
Engine assembly 57
Clutch 58
CLUTCH ASSEMBLY: 60
Ignition 61
Cooling System 63
Fuel & Air System 65
Carburetor 65
Reeds 67
Exhaust 67
Rear wheel pullers 68
Brakes 68
Rear Shock 70
Suspension 72
Adjustment 72
Front Fork Operation 73
Fork Damping Adjustments 73
Rear Shock Adjustments 74
Carburetion 77
Troubleshooting 79

General Information

Specifications - General

Items	CX50 JR
Dimensions	
Wheelbase	36.00” (914mm)
Wheel size	10” (254mm)
Seat height	23.9” (607 mm)
Fuel tank volume	.65 gallon, 2530 cc
Engine	
Type	2-stroke, single cylinder, reed valve
Cooling system	Liquid-cooled, VP Racing: Stay Frosty Coolant
Displacement	49.8 cc
Bore and stroke	39 mm x 41.7 mm
Ignition system	Electronic, analogic advance
Spark plug	NGK BPR8ES, BRR8EIX
Gap	0.023” – 0.025” (0.58 – 0.64 mm)
Ignition timing	0.040” (1.0 mm) Before Top Dead Center (BTDC)
Fuel type	High octane ***pump*** gasoline or VP Racing: C50
Premix Oil type	VP Racing: x2 1050
Premix oil ratio after break-in	32:1 – 60:1
Carburetion	14 mm Dell’Orto
Slow (Pilot) Jet / Main Jet	55 / 92
Needle - position	W7-2
Slide	#40
Float Height	16mm ± 0.5mm (0.63” ± 0.020”)
Transmission	
Speed / Clutch	Single / Cobra 3 shoe
Final drive ratio	14/37 T
Chain	420
Transmission / clutch oil type	*Cobra Venom 3 Shoe Clutch Milk*
Quantity	300 ml (10oz)
Chassis	
Front tire	2.75 (80/100) – 10", 15 psi min
Rear tire	2.75 (80/100) – 10"
Pressure	15 psi min. (20 psi for hard pack or rocky conditions)
Front fork	CARD 32mm USD Fully Adjustable w/ Smart Leg
Fork oil type	5wt Fork Oil, 140 ml
Std settings (turns)	Smart leg: 3 out, Compression and rebound 1 1/2 out
Rear Shock (std settings)	Compression Low 7clicks, High 7clicks, Rebound-N/A Race sag 50mm, Free sag 16mm

Optional Suspension Components

Weight of Rider (lb)	Fork Spring	Shock Spring
		SCMUOH08 (255 lb/in) blue
35 – 40 (light)	KCCJ3218 (10 lb/in, .18 kg/mm)	SCMUOH07 (265 lb/in) green
40 – 45 (std)	KCCJ3221 (12 lb/in, .21 kg/mm)	SCMUOH04 (275 lb/in) red
46 to 55 (stiff)	KCCJ3225 (14 lb/in, .25 kg/mm)	SCMUOH05 (285 lb/in) yellow
56 and more		SCMUOH06 (295 lb/in) white

Specifications - Torque Values

Fastener	Torque Value			Loctite™	Size & Remarks
	ft-lb	in-lb	Nm		
Cylinder head nuts	9	110	12		M6 X 1.0
Cylinder nuts	22	265	30		M8 x 1.0**
Crankcase bolts	See the next page				M6 x 1.0
Spark plug	(SP)	(SP)	(SP)		M14 x 1.25
Stator bolts	2.1	25	2.8	243	M5 X 0.8
Ignition rotor nut	33	400	45	243	M10 x 1.25
Stator cover bolts	1.7	20	2.3		M4 X 0.75
Clutch cover bolts	5.8	70	7.9		M6 X 1.0
Clutch nut	40	480	54	263	10 x 1.25
Clutch bolts	12	144	16	263	M6 x 1.0
Engine mount bolts	22	265	30		M8 X 1.25
Swingarm pivot	21	250	28		M14 X 2.0
Shock bolt	35	420	47	243	M10 x 1.5
Triple clamp bolt (top)	8	90	10		M8 x 1.25
Steering stem pinch bolt	9.5	115	13		M8 x 1.25
Triple clamp bolts (bottom)	6	72	8		M6 x 1.0
Water pump impeller	3	36	4	263	M5 x 0.8
Intake manifold bolts	4.6	55	6.2	243	M6 X 1.0
Front axle pinch bolts	7.5	88	10		M6 x 1.0
Brake caliper bolts	9	106	12	243	M6 x 1.0
Front axle aluminum bolt	9-11	106-132	12-15	243	M10 X 1.25
Fork guard alum bolts	6	88	8	Moly lube	M6X1, ALUM
Brake caliper to carrier	7	84	9.5	243	M6 x 1.0
Brake pad secure	3	35	4		M5 x 0.8
Banjo bolts – brakes	15	177	20		M8 x 1.25
Front axle pinch bolts	7.5	88	10		M6 x 1.0
Brake rotor bolts	9	108	12	243	M5 x 0.8
Rear sprocket bolts	21	250	28		M7 X 1.0
Rear axle nuts	21	250	28		M12 X 1.25

** Use a ‘crows foot’ attachment oriented 90° to the torque wrench

(SP) To apply the proper torque to the spark plug when inserting, first screw the spark plug in until the metal gasket ring causes resistance and then turn another ¼ turn.

Engine case torque values

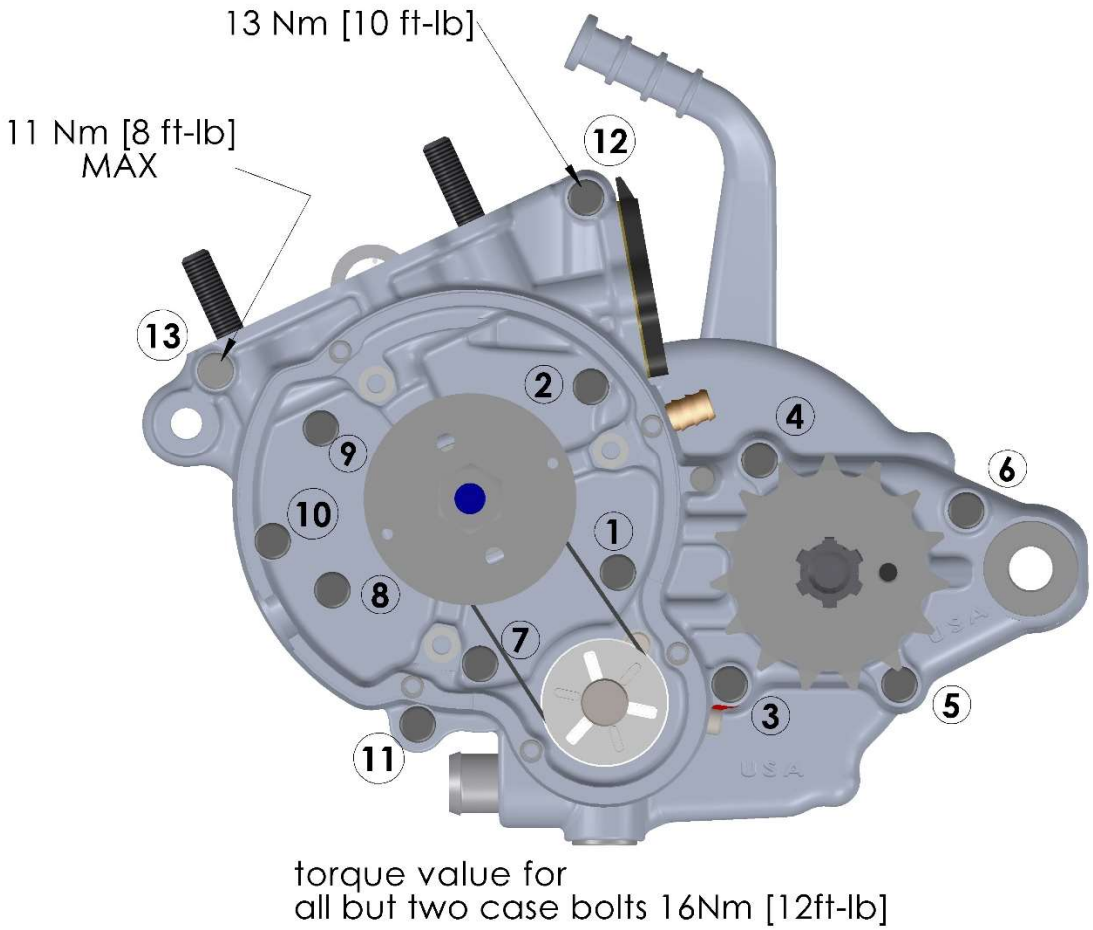

Torque the engine case bolts in the pattern shown above. The upper two bolts have a different toque value compared to the others.

Proper torquing procedure would have you lubricating the threads with 30W oil, torquing the bolts all first to an intermediate torque value of 10-12 Nm and then once they are all at that value, proceed back at bolt #1 and toque each bolt further up to the final value.

Break-In Procedure

Your Cobra CX50JR is a close-tolerance high performance machine and break-in time is very important for maximum life and performance. The CX50 JR can be ridden hard after the first ½ hour break-in time.

Cobra recommends VP Racing: X2 1050 premix oil with high octane pump gas mixed at 32:1 (4 oz of oil to a gallon of gas).

CAUTION:
Failure to use proper fuel, oil, or fuel/oil mixture may result in premature engine wear or damage to the machine.

Adhering to the following break-in schedule will result in long lasting high performance machine.

- Start bike on stand
- First 5-minute period, operate the bike on the stand with a combination of idle and high RPM operation. (avoid prolonged high RPM but spin the rear wheel good at least once or twice per minute)
- Allow bike to cool
- Ride for 15 minutes maximum (avoid prolonged high RPM operation and avoid abusing the clutch with throttle blipping.
- Allow bike to cool and inspect bike for loose fasteners.
- Avoid prolonged operation at Wide Open Throttle for the next half hour.
- After 1 hour of operation
    - Check for loose bolts and nuts.
    - Clean the carburetor bowl.
    - Change the transmission / clutch lubricant.
- Check CFD torque and adjust as necessary
- After 8 hours of operation
    - Change the fork oil.
    - Have a Certified Cobra Mechanic or suspension specialist change the shock oil.
- Your bike is now ready for the highest level of competition!

NOTE: During break-in the bike will likely lose some engine coolant through the radiator overflow hose. Losing up to 4 oz (120 ml) is normal. Proper coolant level will cover the top of the radiator cores. Removing the radiator cap and looking inside is the only way to check the coolant level.

⚠ WARNING
Never remove the radiator cap of a machine that has a warm engine. Burning and scalding could occur.

Starting Procedure

Before starting the machine inspect the following:

- Tire pressure
- Chain tension
- Coolant level
- Proper wear on chain rollers and sliders
- Handlebar tightness
- Throttle assembly movement/cable adjustment
- Air Filter
- Check for loose nuts and bolts
- Turn the fuel on by rotating the fuel petcock knob to the vertically downward position (reserve position is horizontally forward)

NOTE: For best results from your Cobra Motorcycle use only the recommended fuel. Testing has shown that most 'race' fuels actually degrade performance.

⚠ WARNING

Always wear a helmet and other protective riding gear.

When your pre-ride inspection is complete the bike may be started. For a cold engine follow this procedure.

1. Place the motorcycle on a stand of sufficient strength that positions the motorcycle in a level upright position with the rear wheel off the ground.
2. Pull up the choke knob and turn it to lock it.
3. Kick start the engine.
4. Rev the engine in short spurts, turning the throttle no more than 1/4 open until the engine will run without the choke.
5. Verify a functional engine shut-off switch by shutting off the engine.
6. Restart the engine and proceed with riding when the engine is sufficiently warm (i.e. the side of the cylinder is warm to touch).

CAUTION:

Never rev an engine full throttle until the engine is at operating temperature.

⚠ WARNING

This is a high performance race motorcycle. Too much application of throttle will likely land your little racer on his or her arse. Fenders can be replaced but bruised egos and other body parts take longer.

CAUTION:

Cobra recommends that you tell your child to take it easy the first couple of minutes in practice until the engine comes up to full operating temperature.

CAUTION: Make sure your riders' foot is not resting on the foot brake while they are riding.

Maintenance

A properly maintained machine is safer, faster, and more fun to ride. It is important that you adhere to this maintenance schedule so as to promote the longevity of your Cobra Motorcycle

Tips

1. Recommended lubricants:
    a. Cobra Clutch Milk is by far the best **auto clutch lubricant.** It is a full synthetic lubricant that has been specifically formulated for Cobra's auto clutch and has;
        - Exceptional film strength over petroleum based oils or synthetic blends.
        - Extreme temperature tolerance.
        - NO frictional modifiers.
        - Dispersant package to keep clutch fibers in suspension so they can be flushed out when the oil is changed.
        - Extremely low viscosity for minimal drag and 'windage'.
    b. *VP Racing: X2 1050* oil is the recommended **premix oil** because:
        - Its Ester base leaves a film on all parts at all times. No metal to metal startups or corrosion potential.
        - Exception film strength over petroleum based oils or other synthetic blends.
        - Easily atomizes and burns completely.
        - Does not fall out of suspension from premix in cold weather.
        - Produces virtually no coking deposits, leaving pistons, rings and heads extremely clean with minimal pipe 'spooge'.
2. Filling your transmission with more than 8.0 oz (235 cc) of lubricant will help to transfer heat from the clutch. Filling with more than 12 oz (355 cc) will degrade performance.
3. The cylinder base gasket has been 'fitted' for your engine. The code number stamped into the engine cases will guide you to what thickness base gasket is required during a common top end service. See the service section of this manual to correspond a code number with a base gasket part number.
4. Evaluate the bikes jetting only after it has been warmed up to race temperatures.
5. New chains will stretch on first use. Never install a new chain prior to a race. Always 'break' them in during practice.
6. Your Cobra Motorcycle has a 10-digit VIN (Vehicle Identification Number). The first three digits indicate the model while the sixth and seventh indicates the model year.

a. Example, CJRxx17xxx is a 2017 CX50 JR.

7. Because of the amount of heat generated by the clutch and engine during extended periods of riding, it is advisable to remove the ignition cover afterward to allow the ignition to cool off. The heat transfers through the cases and can damage the stator as it cools off because of lack of airflow around the stator.
8. If you ever need to weld anything on the bike, disconnect the spark plug cap, unplug the ignition, disconnect the kill switch, scrape the paint bare near the area to be welded and put the ground clamp as close to the area to be welded as possible.

⚠ WARNING

Be sure the fuel tank and carburetor have been removed and safely located away from the welding process.

9. The frame is 4130 Chrome Moly and it is important to weld it with the proper rod and heat settings set as light as possible. Cobra recommends replacing the frame with a new one if the old one becomes damaged. Use ER70S6 filler if welding on the frame.
10. If your kick-starter lever does not return properly, first try loosening the six kick/clutch cover screws ½ turn. Hold the kick lever ½ way down while retightening the six screws starting for the center and working out
11. Inspect CFD slip torque after the 2nd ride and then again after the 6th ride. After this follow the recommended schedule below.
12. Check proper clutch engagement before and after each ride. If the clutch is engaging properly DO NOT feel the need to take the clutch apart to; measure the spring stack, clean the stack, replace the springs, etc... Cobra has worked very hard to make a clutch that is low maintenance and so only take it apart if it NEEDS to be maintained.

Schedule

- Prior to each ride
  - Check that the air filter is cleaned and oiled.
  - Insure the smooth operation of the throttle cable (throttle soundly ‘clacks’ shut).
  - Check for frayed strands of the throttle cable inside the throttle housing.
  - Check for adequate tire pressure.
  - Check all nuts and bolts for proper torque.
  - Spray all moving parts with WD40 or other light oil.
  - Check drive chain for
    - Proper tension.
    - Adequate lubrication.
  - Insure that the ignition stator and rotor are clean and dry.
  - Check the frame for cracks in the metal or cracks in the paint that might Indicate that the metal has been stressed beyond its safe limits.
  - Check the rims for signs of stress, like cracks around the rim, spokes and hub.

    - Equalize the pressure in the forks with atmosphere.
- Every 2 hours of operation
    - Replace the transmission oil.
    - Check the CFD torque
- Every 10 hours of operation
    - Replace the fork oil.
    - Have the shock oil replaced by a Certified Cobra Mechanic.

Replacing Transmission / Clutch Lubricant

Tools needed:

- 5mm allen wrench
- Minimum of 300 cc (10 oz) *Cobra Venom 3 Shoe Clutch Milk* (Part #MCMUGF32).

Procedure:

1. Begin this procedure with a bike that has been ridden more than 5 minutes but less than 10 minutes. It is desired to have the engine warm enough so that the oil is 'runny' but not so hot that there is risk of being burned by the engine or the oil.

⚠ WARNING

Hot oil and hot components on the motorcycle may cause burns.

2. Remove the oil drain plug located on the right side of the engine, on the clutch cover, near the brake lever (figure 1).
3. After it has drained, reinstall the plug, being sure that the gasket is in place.
4. Reapply oil from oil fill plug 300 cc (10 oz) *Cobra Venom 3 Shoe Clutch Milk* thru the oil fill plug.

NOTE: Putting additional oil, up to 350 cc (12 oz), can help clutch life. More than 350 cc (12 oz) will degrade engine performance.



Figure 1

5. Reapply the oil fill plug, hand tight, being sure the gasket is in place.

CAUTION:

Cobra has spent considerable time and money developing the proper lubrication to handle the harsh environment of the automatic clutch and transmission of this motorcycle. Cobra's specially developed *Cobra Venom 3 Shoe Clutch Milk* (Part #MCMUGF32) was formulated to provide superior lubrication and cooling capability over extended periods of time and is the recommended lubricant for your Cobra motorcycle.

Proper Chain adjustment

Tools required for chain adjustment

- 19 mm wrench or socket
- 13 mm wrench or socket

1. Make sure that the rear wheel is aligned properly.
2. A properly adjusted chain will have 35mm (1.368”) free movement behind the chain block with no load on the bike. (figure 2)

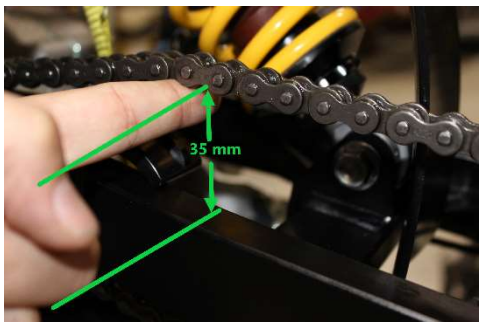

Figure 2

3. Sit on the bike and verify that the chain has a minimum of 12mm (1/2”) free movement when the chain is at its tightest point.
4. If the chain requires adjusting, loosen the axle with a 19 mm wrench and tighten the chain by rotating the adjustor bolts clockwise (CW) or loosen the chain by rotating the adjustor bolts (CCW).
5. Ensure proper alignment of the rear wheel by making sure there are equal amounts of the alignment hole (figure 4) showing on each side of the wheel.
6. Retighten the axel bolt to 25 ft-lb (34 Nm).
7. Retighten the adjustor bolt



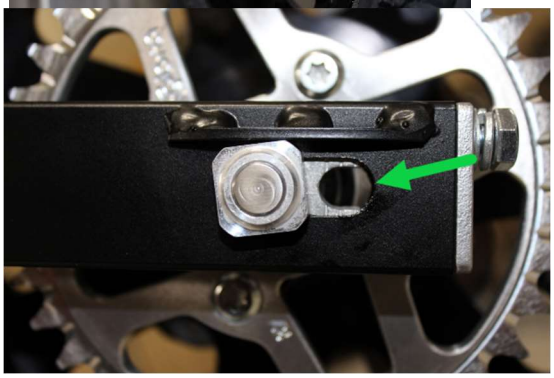

Figure 3 (top), Figure 4 (bottom)

Rear Brake Pedal Height

Brake pedal toe tip height can be adjusted with the nut and adjuster located below the rear brake master cylinder. The free-play is not adjustable on this model.

CAUTION: Use a New container of VP Racing: 622 DOT4 Racing Brake Fluid if necessary to add fluid.

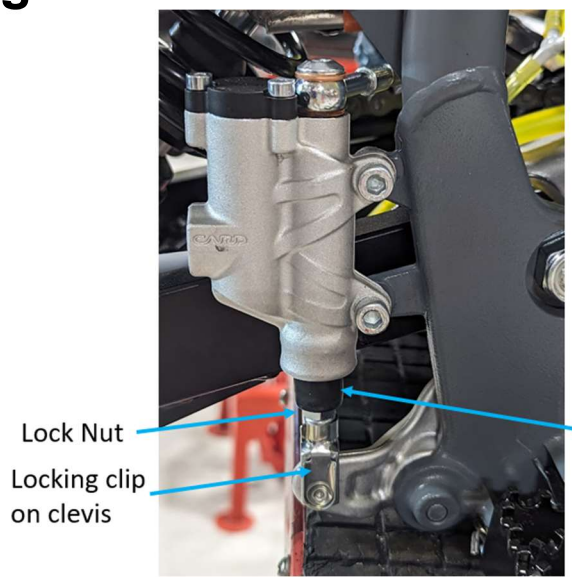

Figure 2b

Setting rear brake pedal position (see figure 2b):

1. Loosen the height adjust lock nut (10mm wrench)
2. Adjust the height adjustment shaft (fingers on the threaded portion of the plunger) to raise or lower the pedal:
    a. Standing riding position, and
    b. Sitting riding position.
3. Tighten the height adjust lock nut.

NOTE: If it's not possible to rotate the threaded adjuster by finger, the next way would be to remove the clevis from the brake pedal by popping of the **Locking Clip**, use vice grips or similar on the threaded portion to keep if from rotating, and use a wrench on the square portion of the clevis that remains on the brake plunger

NOTE: Turning the clevis Clockwise will lengthen the adjustor (plunger), will raise the toe tip of the brake pedal, and turning the clevis Counter-Clockwise will shorten the adjustor (plunger) lowering the toe tip of the brake pedal.

⚠ WARNING

Make sure that the free play locking clip is installed such that one must push forward, toward the front of the bike, to remove. Otherwise the clip is apt to come undone while riding.

Air Filter Cleaning

Tools recommended for air filter maintenance:

- #2 Phillips head screwdriver
- 4 mm Allen wrench
- Foam filter oil

Procedure

1. Removed the seat with a 4 mm Allen wrench.
2. Remove the filter/air inlet boot from the back of the carburetor with a Phillips screwdriver
3. Pull the filter / boot assembly out the top of the air box.
4. Clean the filter in a nonflammable solvent to remove the filter oil.

⚠ WARNING

Do not clean the air filter with gasoline or other highly volatile petroleum product. Diesel fuel or kerosene would be preferred but caution should still be taken. Hot soapy water works well.

5. Clean the filter in hot soapy water to remove all dirt particles.
6. Allow it to dry thoroughly.
7. Saturate with filter oil and remove excess.

NOTE: The Cobra is equipped with a special designed Air box. It is very important to keep the air filter clean and properly oiled with high quality water-resistant foam filter oil. It's very important to oil your filter consistently each time because varied amounts of oil will change your carburetor jetting.

8. **Reinstall** the filter / boot assembly making sure the letters "CM" are visible between the carburetor and air box (figure 4).



Figure 4

NOTE: Make sure you change or clean your filter after each moto. We recommend carrying multiple filters in your toolbox, one for each practice session and moto.

Fork Maintenance

Cobra strongly recommends that a professional service technician conduct all internal maintenance other than changing springs and oil. This will help to ensure safe and consistent operation.

For routine maintenance, the chart below provides suggested service intervals for common procedures:

	Each Ride	***10 hours***	***20 hours***	***As Needed***
Bleed excess air	***X***			
Change Oil		***X***		
Change Seal/Swiper			***X***	
Change Bushings				***X***

Fork Air Bleeding

Tools required

- 3mm hex key (Allen wrench)

During normal operation, both fork legs will build up air pressure. This pressure acts as an additional spring so it must be bled on a regular basis to maintain consistent suspension operation. Before each ride, loosen the socket head cap screw located at the front of each fork cap far enough so that any excess pressure in the leg is relieved. After excess air is bled off, retighten the screw to 5 in-lb. Be careful not to lose or damage the sealing ring that is located under the head of each bleed screw.

Fork Oil Replacement

Tools required

- 32mm Fork Cap Tool (MCMUTL32)
- 19mm wrench or socket
- 4 & 5 mm hex key (Allen wrench)
- 9/16 (14mm) wrench – crow's foot for proper assembly
- Mallet
- 5 wt. Fork oil

Disassembly procedure

1. Remove the front wheel (19 mm wrench).
2. Remove the brake caliper from the fork leg (4 mm hex key).
3. Loosen the fork caps (32mm fork cap tool).
4. Remove the fork legs from the triple clamps (5 mm hex key).
5. One leg at a time
    a. Remove the fork cap from the fork tube.
    b. Pull the fork spring down to gain access to the fork cap jam nut and secure it with a 9/16 wrench.
    c. Holding in one hand the 9/16 wrench use the fork cap wrench to unscrew the fork cap from the damper rod.
    d. Remove the fork spring pad, and fork spring.
    e. Inside the damper rod, the rebound adjustment screw pin is resting and will fall out of the damper rod when the fork is inverted. Try to catch it before it falls into your oil bucket.
    f. Invert the fork and allow the oil to drain completely. Working the damper rod up and down will speed up the draining process.

Assembly procedure

1. Fill the fork with 140ml of fork oil.
2. Work the damper rod up and down to allow the fork cartridge to fill with oil.
3. Install the rebound adjustment screw pin into the damper rod.
4. Install the fork spring and spring pad.

5. Extend the damper rod completely and Compress the fork spring enough to begin threading the fork cap back onto the damper rod.
6. Make sure that the fork cap threads onto the damper rod completely before it makes contact with the jam nut.
7. Tighten the jam nut to 13Nm using the ‘crow’s foot’ attached to torque wrench
8. Tighten the fork cap to the fork leg outer
9. Pump the fork leg several times to verify that it operates smoothly.
10. Install each leg back into the triple clamp. Torque each pinch bolt to 8N-m (6 ft-lb) making sure both legs are set to the same height in the clamps.
11. Reinstall the brake caliper.
12. Reinstall the front wheel (25 ft-lb, 34 Nm).

Cobra Frictional Drive (V3 CFD)

The Cobra Frictional Drive (CFD) is essentially an adjustable slip clutch that dissipates torque spikes transmitted from the rear wheel to the rest of the drive line and engine. Instead of these torque spikes potentially damaging internal components, the CFD allows the transmission to slip with respect to the engine. For this to occur, the CFD must function properly by ‘slipping’ above a minimum torque value.

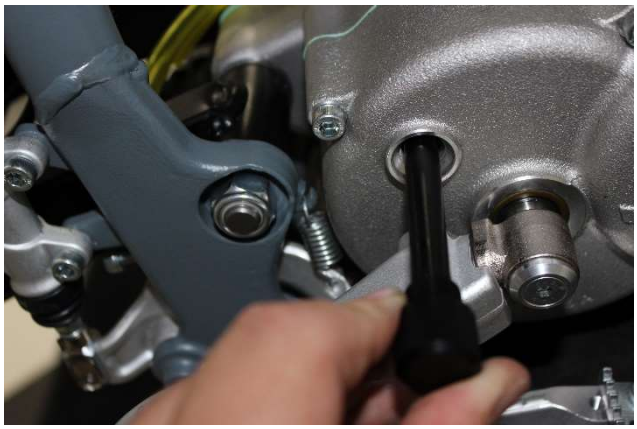

The safe minimum slip torque of the CFD should be checked every 2 hours of operation, after break-in.

The slip torque value should be above 80 ft-lb (108 Nm) measured at the sprocket with the following process.

To properly measure the minimum torque at which the CFD (Cobra Frictional Drive) slips

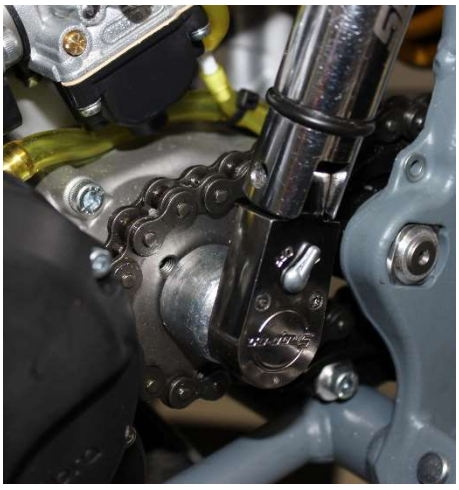

1. Remove the oil fill plug and install the check tool/pin MCMUTL40.
2. Make sure that it is threaded in completely until it bottoms out.
3. Install the Sprocket Socket CFD torque checking tool (MCMUTL15) on the output shaft protruding through the sprocket.

CAUTION
It may be necessary to remove the ECKGSR03 sprocket clip, or the sprocket entirely, to ensure good engagement between the tool and the shaft

4. Verify with a torque wrench applied to the Sprocket Socket that the V3 CFD does not slip below 108 Nm (80 ft-lb) in either direction.

5. If there is slippage below 108 Nm (80 ft-lb) remove the cotter pin and tighten the castle nut on the CFD one more position (it is a left hand thread nut so you must turn it counter clockwise)

NOTE: This V3 CFD torque checking method is possible do to with the chain on. Just put the bike on a stand so that the rear wheel can turn freely.

NOTE: The CFD hubs can be removed with the universal puller (MCMUTL70).

If it slips below the value, the CFD must be readjusted as per described in the service section of this manual.

NOTE: If the bike makes a whir, whir, whir, sound coming from the clutch side engine cover it is very probable that the CFD has slipped enough that the brass bushing has worn sufficiently to let the gear operate off center. Time to install a CFD refresh kit (EKMU0033).

Throttle cable strain relief



To reduce the likelihood of the throttle cable being pulled from top of the carburetor it is recommended to install two 8” zip ties as shown in the pictures below to strain relief the throttle cable to the carburetor top. One zip tie securing the boot to the cable the other securing it to the threaded cable adjuster.

We will be doing this in production going forward.

This applies to all Cobra CX50’s

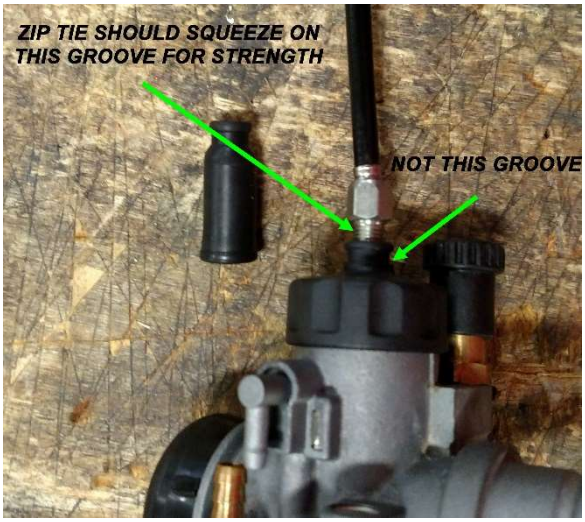

NOTE: For the strongest grip, the bottom zip tie should be squeezing on the groove between the hex adjuster and the top, NOT the groove in the carb top.

Parts

Parts – Airbox and Inlet System

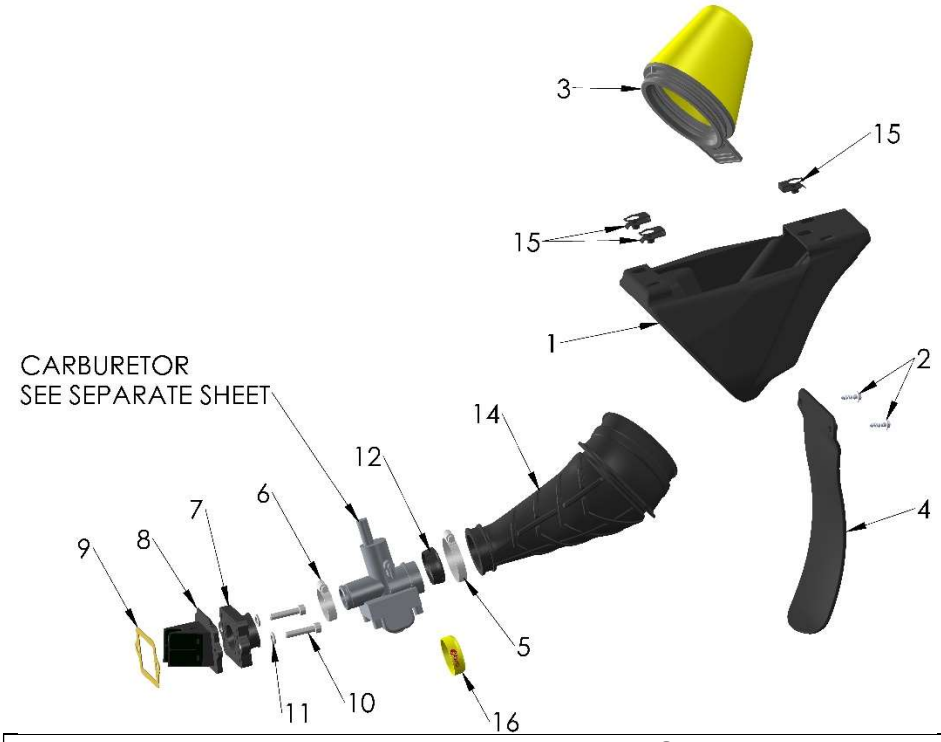

Airbox and Inlet System		
REF #	**PART #**	**DESCRIPTION**
1	TCCJ0013	AIRBOX
2	HCSP0004	SCREW – PLASCREW – ALUMINUM
3	RCCJ0005	AIR FILTER ASSY
4	TCC60008	MUDFLAP
5	MCKGHO01	HOSE CLAMP – BOOT TO CARB
6	MCKGHO04	HOSE CLAMP – CARB TO MANIFOLD
7	RCMU0036	INLET MANIFOLD
8	ECMU0246	REED CAGE ASSEMBLY WITH REEDS VFORCE
9	ZCCS0001	GASKET – REEDS TO ENGINE
10	HCBC0630	M6X30mm SOCKET HEAD CAP SCREW
11	HCWF0601	6mm FLAT WASHER
12	RCCM1301	VELOCITY STACK (SCREWS ONTO CARB)
13	ECCS0030	REED REPLACEMENT KIT
14	RCCS0001	BOOT – AIR FILTER
15	HCCN0006	6mm CLIP NUT – THICK MATERIAL
16	RCMU0109	CARBURETOR INLET CAP
	ECCS0030	REEDS REPLACEMENT KIT
	FCMU0026	FUEL LINE 5” (NOT SHOWN)
	MCMUCL04	HOSE CLAMPS – FUEL LINE (NOT SHOWN)
	RCMU0022	VENT HOSE (NOT SHOWN)

Parts – Bars and Controls

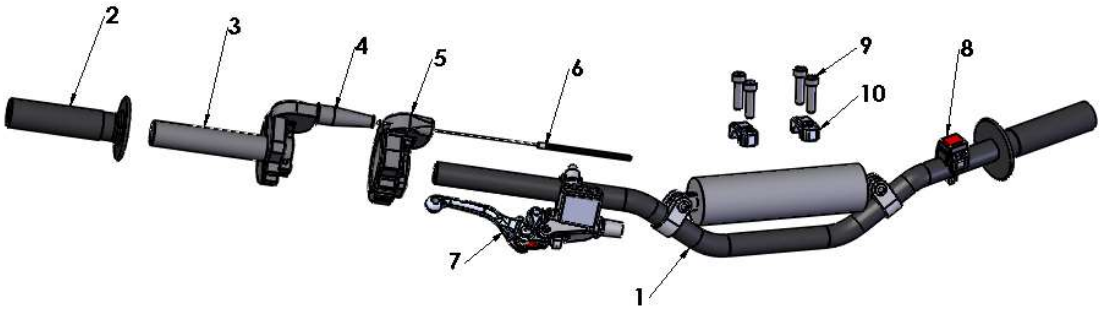

Bars and Controls		
REF #	**PART #**	**DESCRIPTION**
1	FAMU0017	HANDLEBAS – MICROBARS – COBRA BEND
2	TCMU0021	GRIPS (SET OF TWO) – MICROGRIPS –
3	FAMU0016	THROTTLE ASSEMBLY – COBRA MICRO
3A	FAMU0015	TUBE ASSEMBLY – THROTTLE – 2 PIECE MICRO
3B	HCBC0525	M5 X 25 SHCS – THROTTLE ASSEMBLY
3C	FCMU0041	STOP RING – MICRO BAR THROTTLE
4	FCPW0004	CABLE COVER
5	FCMU0021	THROTTLE COVER
6	FCMU0019	THROTTLE CABLE
6A	HCNJ0801	NUT – 8MM JAM
7		SEE FRONT BRAKE
8	FCMU0033	KILL SWITCH ASSEMBLY
9	HCBC0806	M8X30mm SOCKET HEAD CAP SCREW (4 REQ'D)
10	TCMU0060	BAR CLAMP
ACCESSORY	MCMUAM11	GRIP DONUT – PAIR – MICRO BAR
ACCESSORY	TKMU0002BLK	BAR RISER KIT

Parts – Carburetor

PILOT JET			MAIN JET*			
48	RCMU0048		88	RCMU0088	94	RCMU0094
50	RCMU0050		89	RCMU0089	95	RCMU0095
52	RCMU0052		90	RCMU0090	96	RCMU0096
55	RCMU0055		91	RCMU0091	97	RCMU0097
60	RCMU0060		92	RCMU0092	98	RCMU0098
65	RCMU0065		93	RCMU0093		

*Larger and Smaller sizes are available upon request

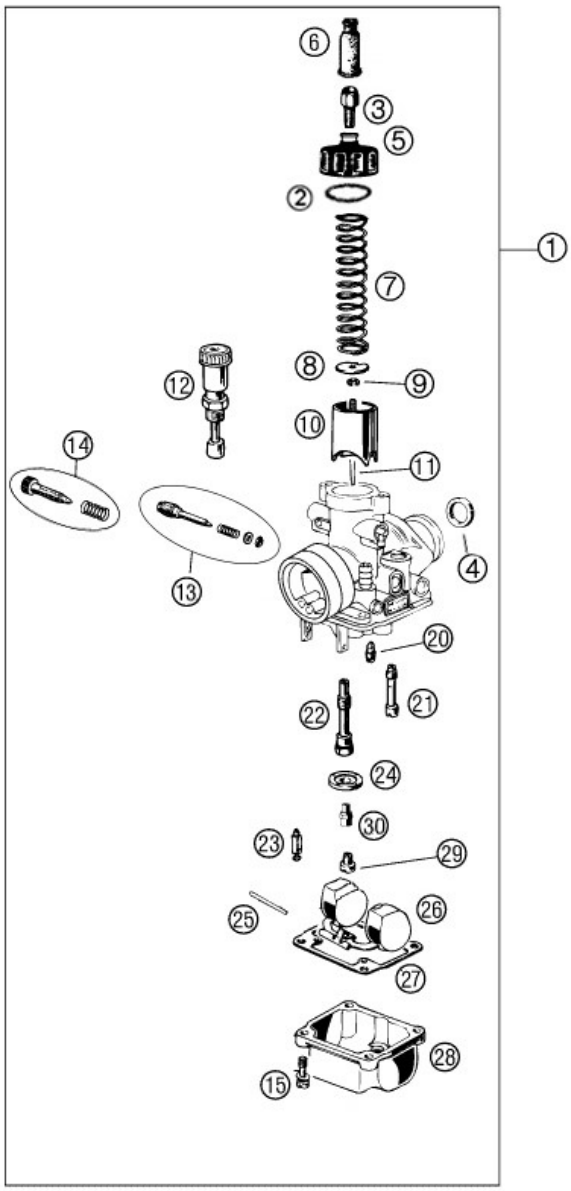

Carburetor		
REF. #	**PART #**	**DESCRIPTION**
1	RACJ5014	CARBURETOR
2	RCMU0307	GASKET – CARB TOP
3	RCMU0003	CABLE ADJUSTOR
4	RCCM0314	RESTRICTOR - 14MM CARB
5	RCMU0046	TOP CARB THREAD ON
6	RCMU0102	RUBBER CABLE CAP SEAL
7	RCMU0004L	SLIDE SPRING - LIGHT
8	RCMU0028	NEEDLE RETAINER PLATE
9	RCMU0007	NEEDLE CLIP
10	RCMU0350	SLIDE - #50 BIG AIR
11	RCMU0601	NEEDLE – W7
12	RCMU0204	CHOKE ASSEMBLY
12A	RCMU0209	O-RING CHOKE ASSEMBLY
13	RCMU0009	FUEL MIXTURE SCREW #16
14	RCMU0011	IDLE ADJUSTMENT SCREW #18
15	RCMU0201	SCREW – FLOAT BOWL
20	RCMU00xx	PILOT JET, xx denotes size
22	RCMU0262	ATOMIZER 2.62 AU STANDARD*
23	RCMU0107	FLOAT NEEDLE
24	RCMU0012	DIFFUSER #20
25	RCMU0016	FLOAT RETAINER PIN
26	RCMU0301	FLOAT #7
27	RCMU0103	FLOAT BOWL GASKET
28	RCMU0306	FLOAT BOWL W/ DEEP WELL
29	RCMU00xx	MAIN JET, xx denotes size
30	RCMU0044	MAIN JET EXTENSION
NOT SHOWN	RCCM1301	VELOCITY STACK
NOT SHOWN	RCCS0006	FUEL LINE, 5”
NOT SHOWN	MCMUCL04	HOSE CLAMPS – FUEL LINE
NOT SHOWN	RCMU0020	ELBOW - CARB VENT
NOT SHOWN	RAMU0001	CANNULUS - Y STYLE CARB VENTS
ACCESSORY	RCMU0330	SLIDE - #30 BIG AIR
ACCESSORY	RCMU0340	SLIDE - #40 BIG AIR
ACCESSORY	RCMU0360	SLIDE - #60 BIG AIR
ACCESSORY	RCMU0026	NEEDLE - W4
ACCESSORY	RCMU0602	NEEDLE - W16

*Different sizes are available upon request

Parts – Coolant System

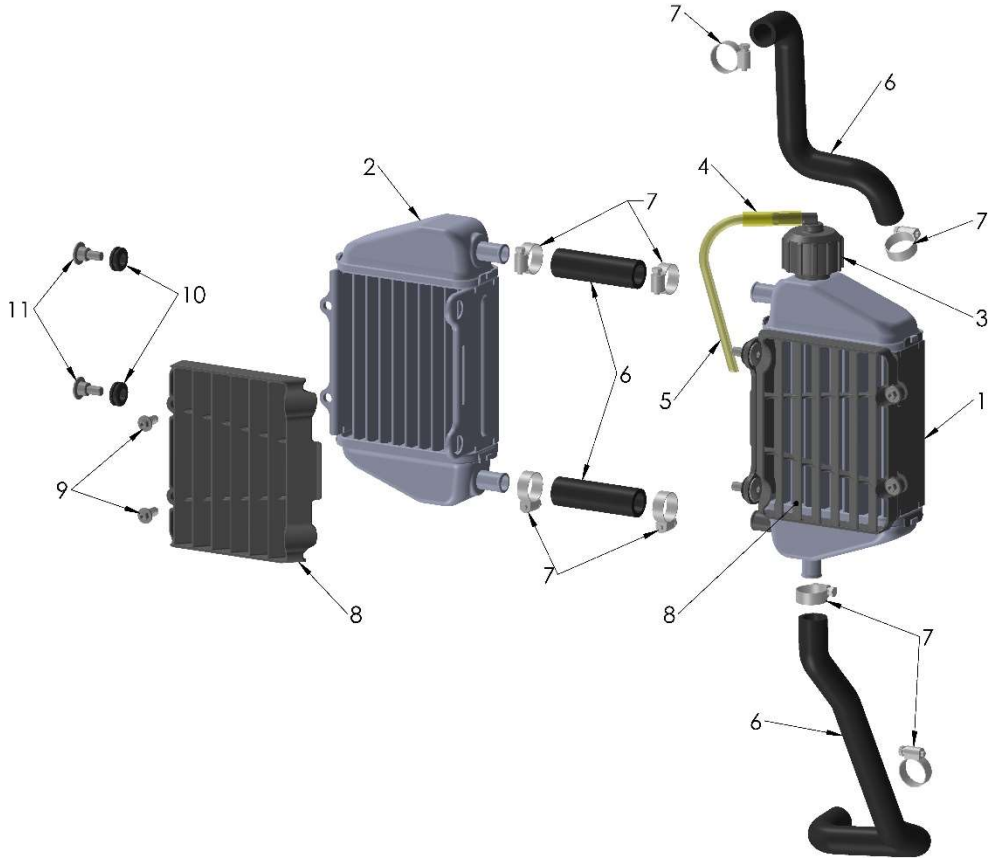

Coolant System		
REF #	**PART #**	**DESCRIPTION**
1	FCCJ0054	RADIATOR – JR ONLY
2	FCMU0081	RADIATOR
3	FCMU0020	CAP, 1.3 BAR
4	FCMU0322	HOSE – USED AT CLAMP
5	FCMU0113	RADIATOR OVERFLOW HOSE, 22”
6	FKAM0003	KIT – HOSE – VENOM ENGINE 2025 & NEWER
7	MCMUCL09	HOSE CLAMP – 11 TO 20MM (2 REQ’D AT RADIATOR)
8	FCMU0069	LOUVER (2 REQ’D)
9	HCSP0004	SCREW – PLASCREW – ALUMINUM (4 REQ’D)
10	MCMUGR12	GROMMET – RADIATOR MOUNTING (4 REQ’D)
11	HCSP0610	FASTENER – RADIATOR MOUNTING (4 REQ’D)

Parts – Electrical System



Electrical System		
REF #	**PART #**	**DESCRIPTION**
1	ICMU0044	COIL/CDI W/SPARK PLUG CAP
2	ECMU0151	SPARK PLUG, AUTOLITE IRIDIUM
3	FCMU0033	KILL SWITCH ASSEMBLY
4	HCBC0514	M5X14mm SOCKET HEAD CAP SCREW (2 REQ'D)
5	ICMU0023	STATOR WITH GROMMET
6	HCBC0535	M5X35mm SOCKET HEAD CAP SCREW (2 REQ'D)
7	HCBC0525	M5X25mm SOCKET HEAD CAP SCREW
8	HCWF0601	6MM FLAT WASHER FOR STATOR (3 REQ'D)
9	ICMU0042	ROTOR
10	EKMU0035	KIT – PULLEYS, SPACER & BELT RETAINER, VENOM
11	HCNS1001	NUT M10
12	ECC60166	IGNITION COVER
13	HCBC0401	M4X25mm SOCKET HEAD CAP SCREW (3 REQ'D)
NOT SHOWN	ICMU0012	WOODRUFF KEY (NOT SHOWN)
NOT SHOWN	FCMU0030	COVER – KILL SWITCH SCREW
ACCESSORY	ICMU0017	SPARK PLUG CAP – 0 Ω
TOOL	MCMUTL70	TOOL – CLUTCH & 50CC FLYWHEEL PULLER
TOOL	ECMU0079	TOOL – DIAL INDICATOR – SPARK TIMING

Parts – Engine – Bottom End and Transmission

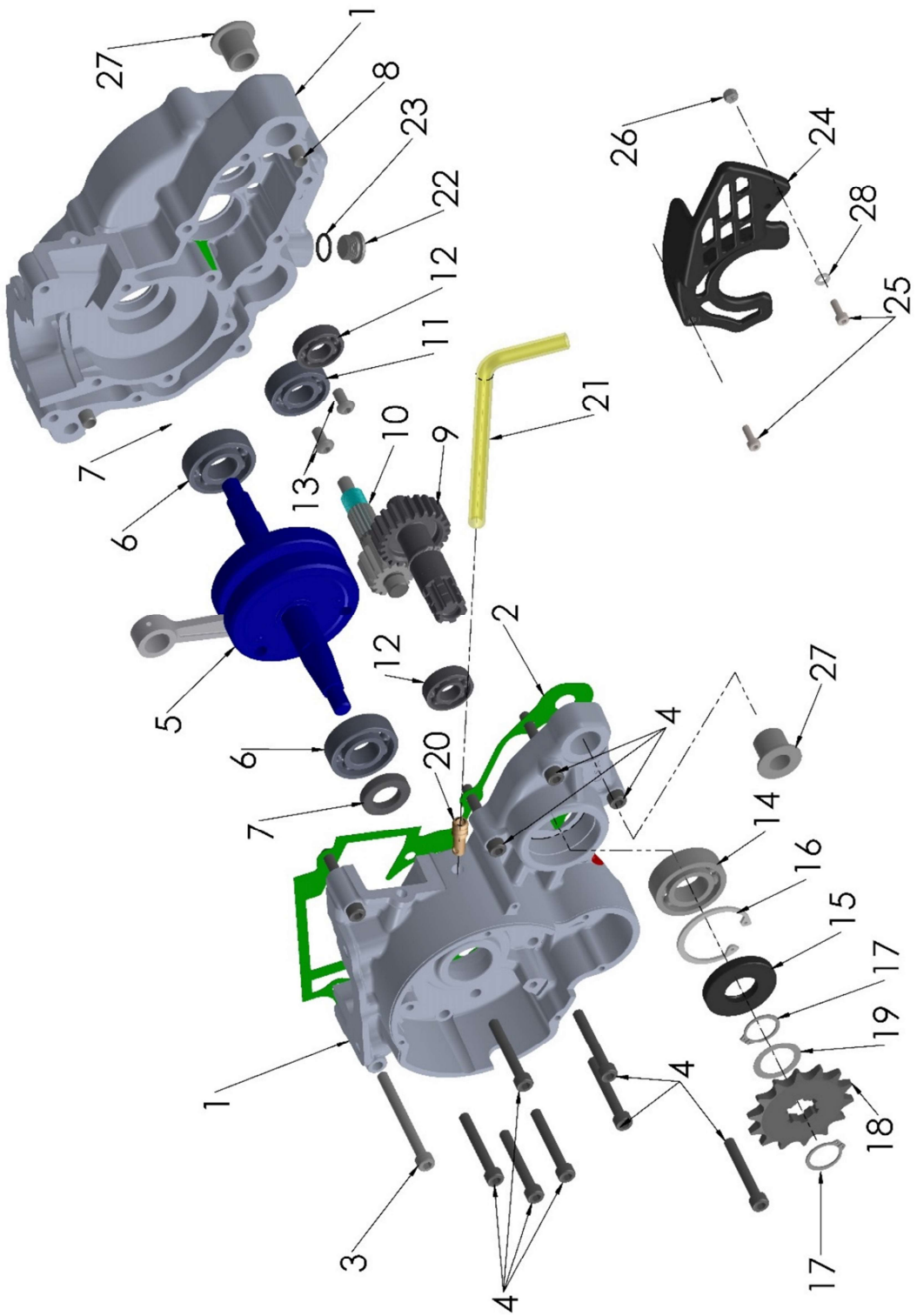

Engine Bottom End and Transmission		
REF #	PART #	DESCRIPTION
1	EKMU2023	CRANKCASE SET WITH BEARINGS, SEALS & GASKET
2	ZCMU0015	GASKET, CRANKCASE CENTER
3	HCBC0665	M6X65mm SOCKET HEAD CAP SCREW (1 REQ'D)
4	HCBC0635	M6X35mm SOCKET HEAD CAP SCREW (12 REQ'D)
5	ECMU0258	CRANKSHAFT - 3 SIDE SPLINE & INTERNAL W/P
6	ECMU0016	BEARING, CRANKSHAFT (2 REQ'D)
7	ECMU0118	SEAL, CRANKSHAFT (2 REQ'D)
8	ECMU0122	DOWEL (HOLLOW), ENGINE CASE ALIGNEMENT (2 REQ'D)
9	ECMU0999	OUTPUT SHAFT, TRANSMISSION WITH GEAR SUPR WIDE
10	ECMU0268	SECONDARY SHAFT, TRANSMISSION WITH GEAR
11	ECMU0001	BEARING, TRANSMISSION SECONDARY SHAFT
12	ECKG0031	BEARING TRANSMISSION SHAFT, (1 EACH CASE HALF)
14	ECKGBR01	BEARING, TRANSMISSION OUTPUT SHAFT
15	ECMU0236	SEAL, OUTPUT SHAFT
16	ECMU0237	SNAP RING – OUTPUT BEARING
17	ECKGSR03	SNAP RING, SPROCKET (2 REQ'D)
18	PCKG0015	SPROCKET, 15 T (STANDARD, 13, 14 & 16 available)
19A	ECMU0176	SHIM – SPROCKET .2MM THICK
19B	ECMU0177	SHIM – SPROCKET .3MM THICK
19C	ECMU0178	SHIM – SPROCKET .5MM THICK
20	ECMU0233	FITTING, CRANKCASE VENT – LARGE
21	ECMU0557	VENT HOSE, CRANKCASE
22	ECMU0272	OIL FILL PLUG, VENOM
23	ZCMUB014	O'RING – OIL FILL PLUG
24	ECMU0280	GUARD – COUNTERSHAFT SPROCKET – CX50
25	HCBC0412	M4 X 12MM SOCKET HEAD CAP SCREW (2 REQ'D)
26	HCNL0401	M4 LOCKNUT
27	ECC60028	BUSHING – ENGINE PIVOT – (1 IN EACH SIDE CASE)
28	HCWF0401	4MM FLAT WASHER
	ZKMU2016	COMPLETE GASKET KIT
	EACJ2017	COMPLETE ENGINE

Parts – Engine Clutch and Kick Lever

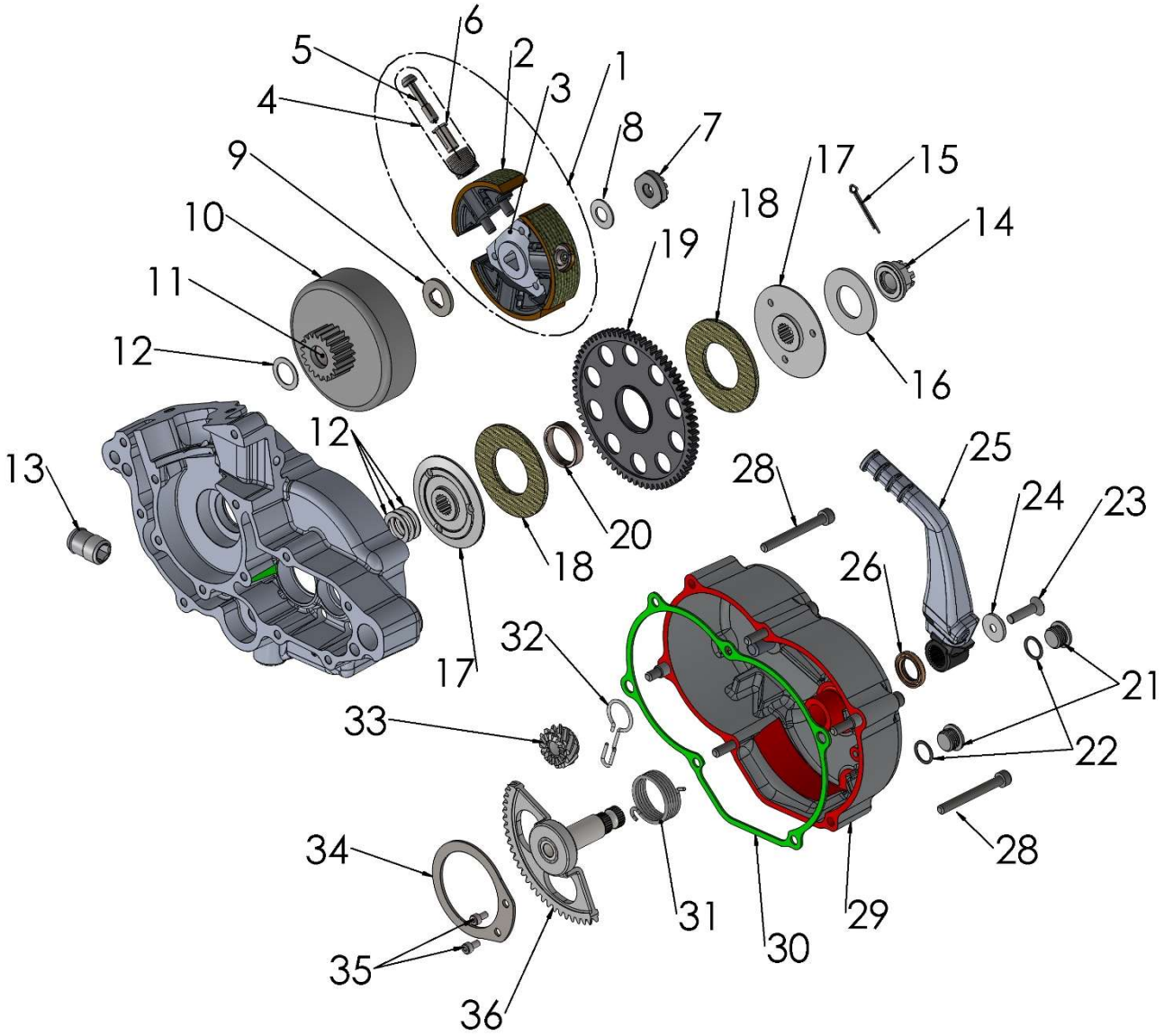

Engine – Clutch and Kick Starter		
REF #	PART #	DESCRIPTION
1	CACJ0100	CLUTCH COMPLETE ASSY - 5GX
2	CACJ0010	3 SHOES & WASHER STACKS W BOLTS - 5GX
3	CCMU0005	CLUTCH ARBOR – 3 SIDED SPLINE
4	CACJ0001	WASHER STACKS - SET OF 3 - CLUTCH - 5GX
5	HCBT0001	BOLT - TORX - 5GX CLUTCH - M6 X 29
6	CCMU0008	SLEEVE - CLUTCH STACK 5GX
7	ECMU0018	CLUTCH NUT, SPECIAL
8	ECDC0030	BELLEVILLE LOCK WASHER
9	CCMU0007	CLUTCH BACKING SPACER
10	ECMU0120	CLUTCH BASKET WITH NEEDLE BEARING
11	ECMU0119	CLUTCH BEARING
12	ECMU0040	CLUTCH TO HUB SPACER(S) (0.030”, 0.76mm)
13	ECMU0132	FITTING - COOLANT
14	ECMU0307	NUT V3 CFD
15	HCCP0010	COTTER PIN 3/32 X 1 ½”
16	ECMU0308	BELLEVILLE SPRING V3 CFD
17	ECMU0306	SLIP HUB V3 CFD (2) REQ’D
18	ECMU0249	FRICTION MATERIAL V3 CFDTHICK (2 REQ’D)
19	ECMU0301	GEAR V3 CFD
20	ECMU0305	BUSHING V3 CFD 7mm
21	ECMU0272	OIL FILL PLUG, VENOM
22	ZCMUB014	O’RING – OIL FILL PLUG
23	HCFH0616	M6X16mm FLAT HEAD BOLT
24	ECMU0250	WASHER – KICK LEVER MOUNTING
25	EAMU0011	KICK LEVER
26	ECDC0078	SEAL - KICKSHAFT
28	HCBC0608	M6X55mm SHCS (2 REQ’D)
29	ECMU0263	CLUTCH COVER ASSEMBLY WITH SEAL AND PIN
30	ZCMU0017	GASKET - CLUTCH COVER
31	ECMU0273	SPRING, KICKSTART
32	ECMUSP01	KICK START DOG SPRING (PAPER CLIP / ‘J’ SPRING)
33	ECMU0207	KICKSTART GEAR SMALL
34	ECMU0278	BRACKET – KICK SHAFT RETAINING
35	HCBC0508	M5 X 8mm SHCS (2 REQ’D)
36	ECMU0269	KICKSTART GEAR & SHAFT
KIT	HKCP0001	10 PACK OF COTTER PINS (HCCP0002)
KIT	EKMU0002	KICKSTART PIVOT KIT SPRING-BALL-SCREW
KIT	HKAM0022	CLUTCH SHIM HARDEWARE KIT
KIT	EKMU0033	CFD RFRESH KIT W’ FRICTIONS, SPRING, BUSHING AND COTTER PINS
TOOL	MCMUTL40	TOOL - CFD – CHECK STOP PIN - VENOM
TOOL	MCMUTL18	TOOL – SPROCKET SOCKET – HIGH TORQUE
TOOL	ECMU0078	TOOL – SOCKET - CLUTCH NUT – CX50
TOOL	MCMUTL03	TOOL – PISTON STOP
TOOL	MCMUTL70	TOOL – PULLER – CLUTCH AND FLYWHEEL – CX50

Parts – Engine – Water Pump

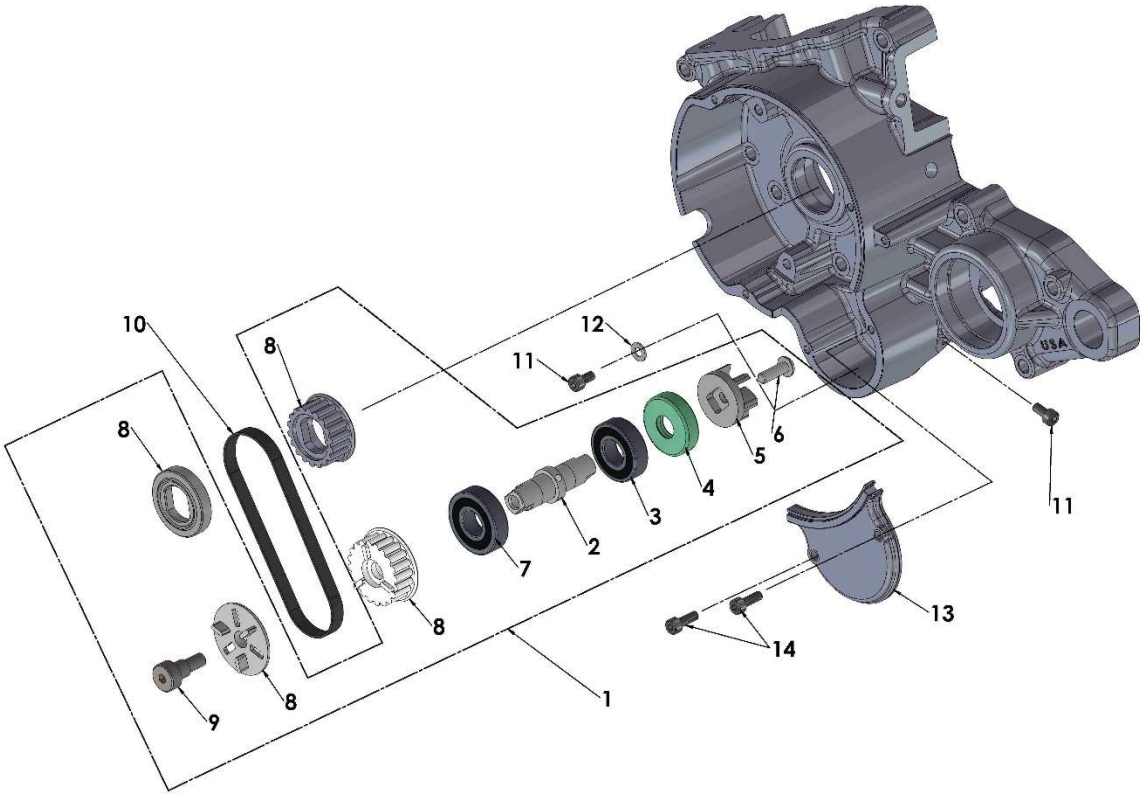

Engine – Ignition and Water Pump		
REF #	PART #	DESCRIPTION
1	EKMU0021	WATER PUMP KIT
2	ECMU0265	SHAFT, WATER PUMP
3	ECKG0072	BEARING, WATER PUMP
4	ECKG0074	SEAL, WATER PUMP SHAFT
5	ECKG0073	IMPELLER, WATER PUMP (ALUMINUM)
6	HCBB0512	M5X12mm BUTTON HEAD
7	ECMU0167	BEARING – WATER PUMP BIG
8	EKMU0035P	KIT – PULLEYS, SPACER & BELT RETAINER
9	HCBS0009	SHOULDER BOLT
10	ECKG0170	WATER PUMP BELT
11	HCBC0408	M4X8mm SOCKET HEAD CAP SCREW (2 PLACES)
12	HCWF0401	4MM FLAT WASHER
13	ECMU0274	COVER – WATER PUMP
14	HCBC0412	M4 X 12 SHCS (2 REQ'D)
TOOL	MCMUTL20	TOOL – WATER PUMP INSTALL - VENOM

Parts – Engine – Top End

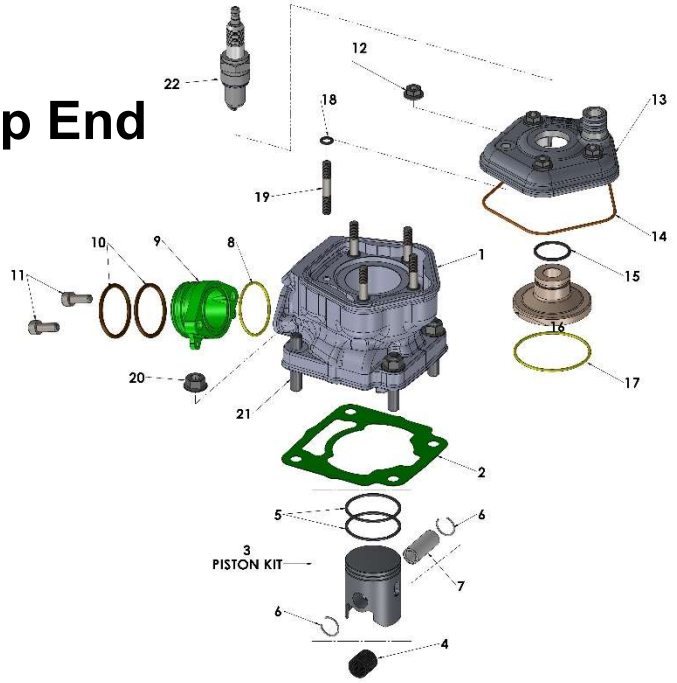

Engine – Top End		
REF #	PART #	DESCRIPTION
1	EKMU0361	CYLINDER KIT (INCLUDES STUDS, PISTON, RINGS, PIN & CLIPS)
2	ZCMU0102	BASE GASKET (0.20mm) THICK
2	ZCMU0103	BASE GASKET (0.30mm) THICK
2	ZCMU0104	BASE GASKET (0.40mm) THICK
2	ZCMU0105	BASE GASKET (0.50mm) THICK
2	ZCMU0106	BASE GASKET (0.60mm) THICK
2	ZCMU0107	BASE GASKET (0.70mm) THICK
2	ZCMU0108	BASE GASKET (0.80mm) THICK
3	ECMU0276A	PISTON KIT – ‘A’ SIZE (B, C, and D sizes available)
4	ECMU0077	BEARING, WRIST PIN
5	ECMU0155	PISTON RINGS (2 PER SET)
6	ECMUSR00	SNAP RING FOR PISTON (2 REQ'D)
7	ECKG0012	WRIST PIN
8	ZCMUOR07	O-RING, EXHAUST FLANGE
9	ECMU0262	EXHAUST FLANGE
10	ZCMOTE11	O-RINGS – PIPE TO FLANGE (2 REQ’D)
11	HCBC0612	M6X12, EXHAUST FLANGE SCREW (2 REQ'D)
12	HCNF0601	6MM FLANGE NUT (5 REQ’D)
13	ECC60149	CYLINDER HEAD OUTER
14	ZCC60009	O-RING, CYLINDER HEAD LARGE
15	ZCMUOR23	O-RING CYLINDER HEAD SMALL
16	ECMU0279	CYLINDER HEAD, INSERT
17	ZCMUOR05	O-RING CYLINDER HEAD MEDIUM - YELLOW
18	ZCMUOR03	O-RING CYLINDER STUD (5 REQ'D)
19	ECC60107	6MM STUD (5 REQ’D)
20	HCNF0801	8MM FLANGE NUT (4 REQ’D)
21	ECC60109	STUD, CYLINDER 8mm (4 REQ’D)
22	ECMU0151	SPARK PLUG, NGK BPR8ES
TOOL	MCMUTL03	TOOL-PISTON STOP
ACCESSORY	ZKMUOR13	TOP END O-RING KIT
	EACJ2020	COMPLETE ENGINE

Parts – Exhaust System

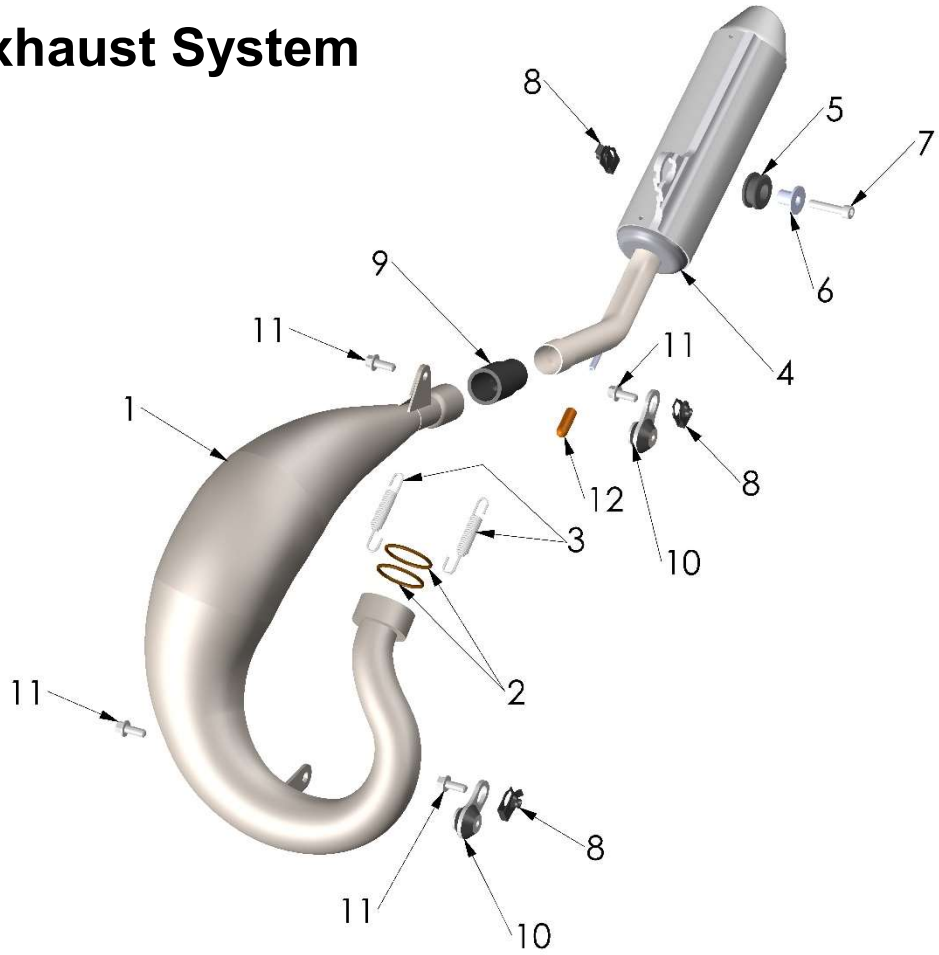

Exhaust System		
REF #	**PART #**	**DESCRIPTION**
1	XACJ2025	EXHAUST PIPE – JR 2025 -
2	ZCMOTE11	HEADER PIPE O-RINGS (2 REQ'D)
3	XCMU0005	EXHAUST SPRING - SHORT
4	XACJ0001	SILENCER
5	MCMUGR03	MOUNTING GROMMET
6	XCMU0051	SPACER
7	HCBC0630	M6x 30 SHCS
8	HCHA0003	M6 CLIP NUT
9	XCC60020	PIPE/ SILENCER SEAL
10	XCMU0033	ISOLATION MOUNT
11	HCBF0616	M6x 16 FLANGE HEAD BOLT
12	MCMUGR08	GROMMET - SILENCER INDEX TO FRAME
ACCESSORY	XCMU0053	SILENCER PACKING KIT – 7"

Parts – Forks & Triple Clamps

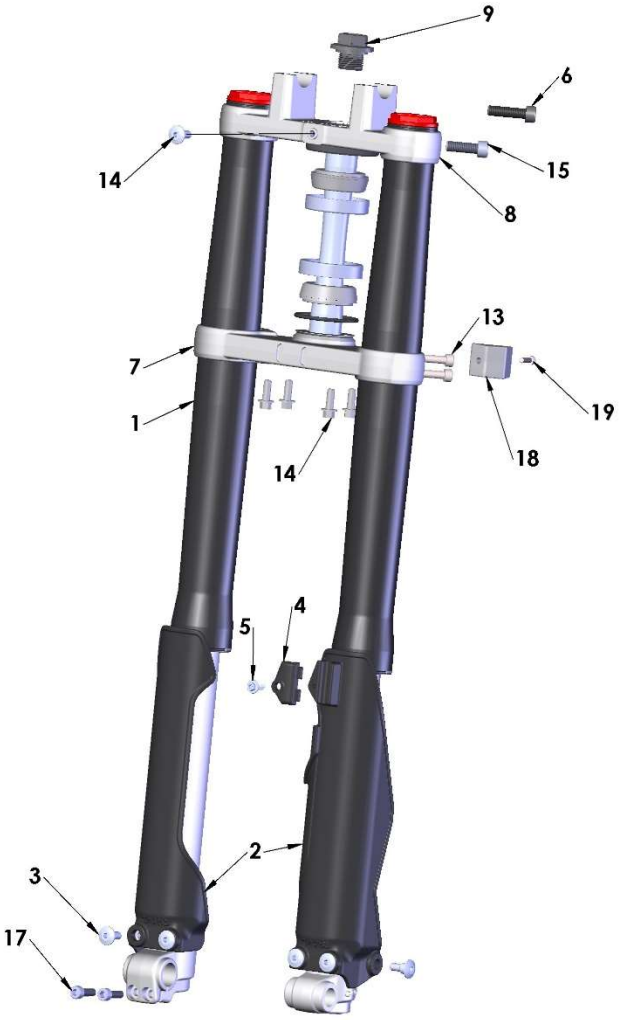

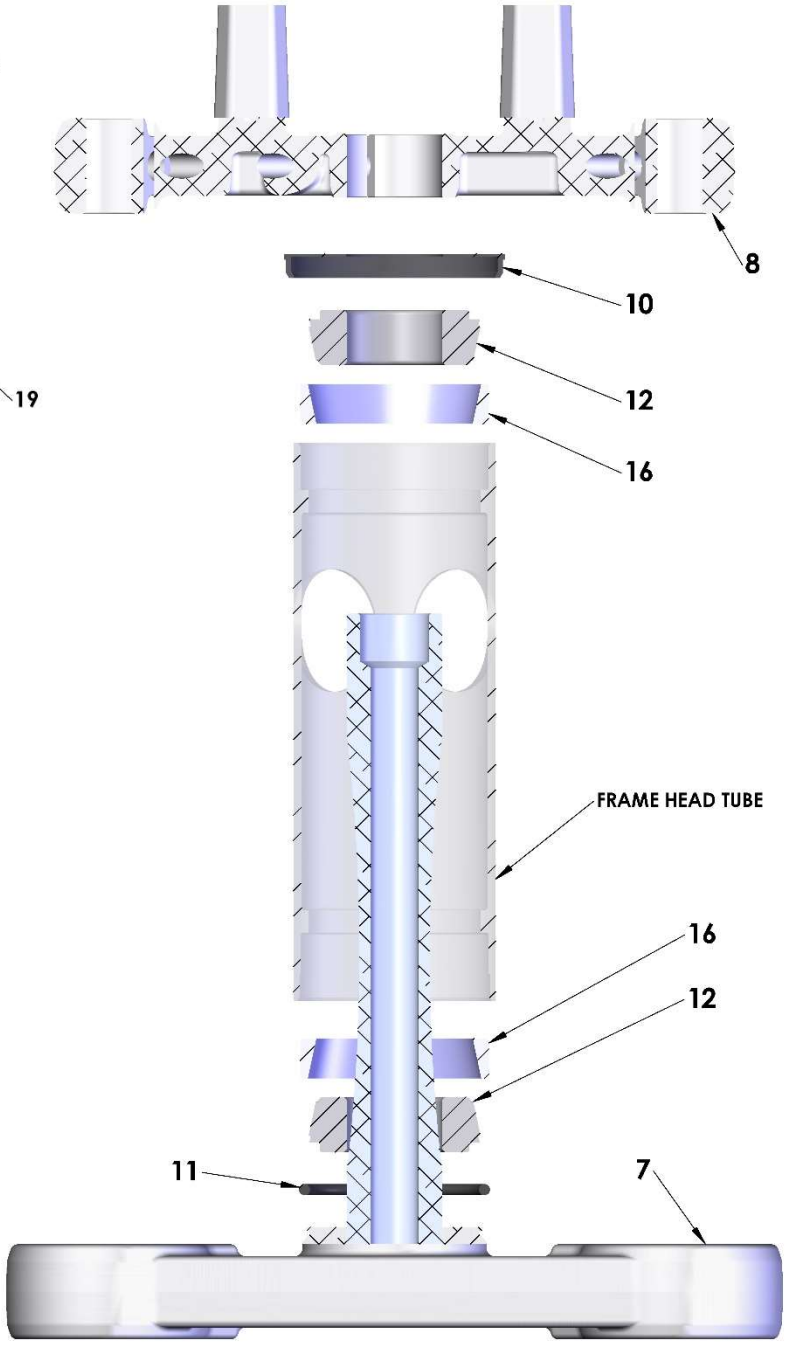

Front Forks and Triple Clamps		
REF #	**PART #**	**DESCRIPTION**
1	KACJ2018	FORK ASSEMBLY JR – FORK LEGS ONLY
2	KCMU0035FXX	FORK GUARD SET – MEGA FLO YELLOW (STOCK)
	KCMU0035	FORK GUARD SET – BLACK (SHOWN)
	KCMU0035WHT	FORK GUARD SET – WHITE
3	HCSP0610	BOLT - FORK GUARD (7 REQ'D, NUMBER PLATE & FORK GUARD)
4	KCMU0036	BRAKELINE CLAMP
5	HCSP0004	PLASTIC SCREW
6	HCBC0806	M8x 30mm SHCS
7	FAMU0020	TRIPLE CLAMP BOTTOM ASSY, (CLAMP & STEM)
8	FCMU0071BLK	TRIPLE CLAMP TOP
9	FCMU0074	BOLT - STEERING STEM - ALUMINUM
10	FCMU0079	DUST COVER (1 REQ'D)
11	FCMU0044	O-RING (1 REQ'D)
12	FCMU0004	STEERING HEAD BEARING (2 REQ'D)
13	HCBC0625	M6X25mm SOCKET HEAD CAP SCREW
14	HCBF0620	M6X20mm FLANGE HEAD BOLT (FENDER)
15	HCBC0825	M8x 25mm SOCKET HEAD CAP SCREW
16	FCMU0011	RACE – STEERING STEM BEARING (2 REQ'D)
17	HCBC0620	M6X20MM SOCKET HEAD CAP SCCREW (2 REQ'D)
18	FCMU0175MP	STEERING STOP (2 REQ'D)
19	HCBB1416	M4x 16mm BUTTON HEAD (2 REQ'D)
ACCESSORY	FKMU0008	KIT – STEERING STEM BEARINGS, RACES AND SEALS
ACCESSORY	MCMUTL44	TOOL - BEARING AND SEAL INSTALLER

Parts – Forks – Leg Assembly – Brake Side

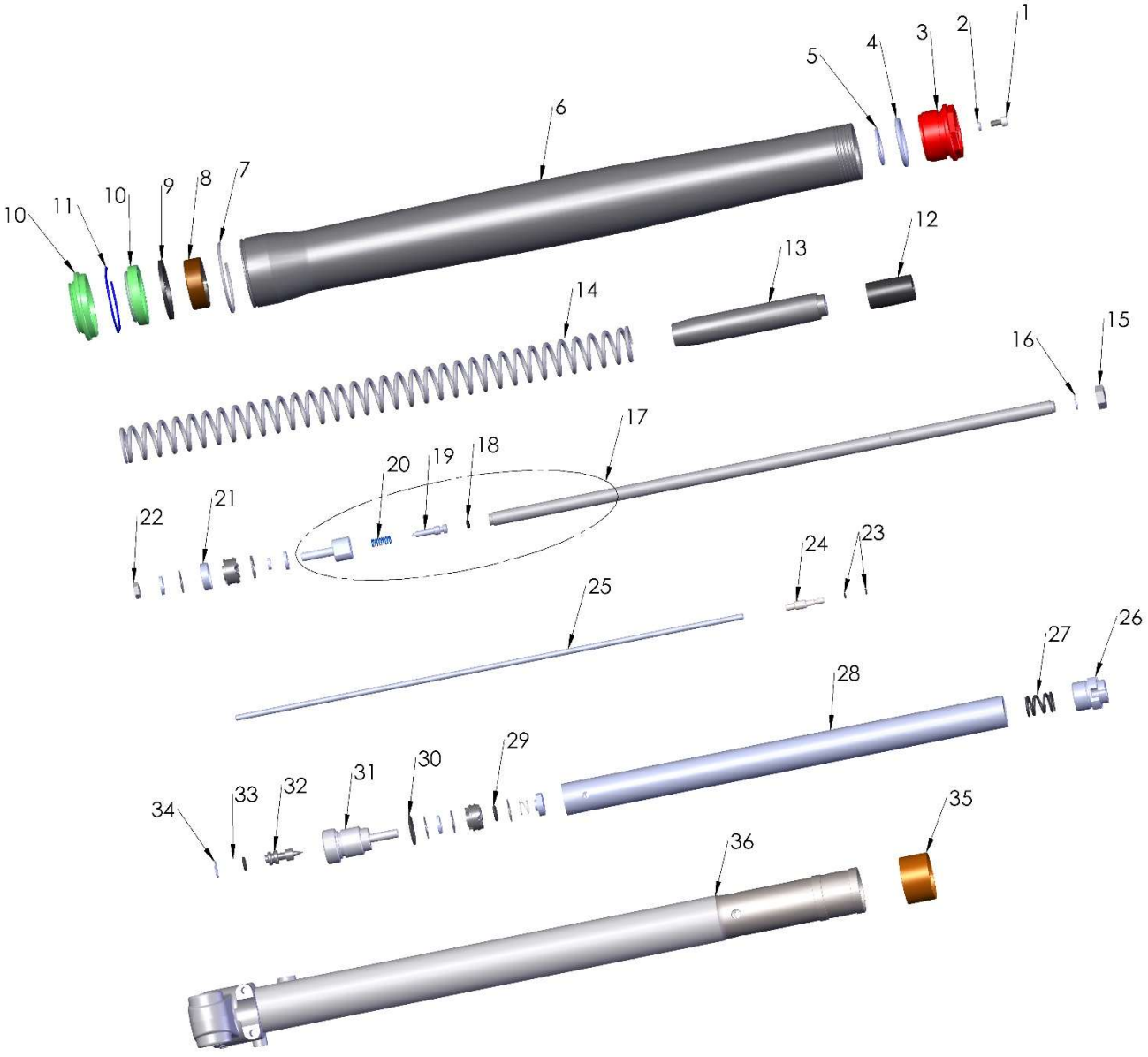

Parts – Forks – Leg Assembly – Brake Side

REF #	PART #	DESCRIPTION
1	HCBC0408	4 X 8 SHCS CLEAR ZINC
2	ZCKG0001	GASKET, BLEED SCREW FORK
3	KCCS0004C	FORK CAP - CONVENTIONAL 32MM USD
4	ZCMUOR18	O-RING – 3mm x 27mm ID
5	KCCS0036	FORK - SPRING WEAR PLATE 32MM
6	KCCS0005	FORK - OUTER TUBE 32MM
7	KCCS0035	RING CLIP FORK OUTER WEAR RING 32MM
8	KCCS0006	FORK GLIDE RING BOTTOM 32MM
9	KCCS0032	FORK SEAL SPACER 32MM
10	KKCS0004	FORK SEAL AND SWIPER KIT 32MM
11	KCCS0002	RING CLIP - FORK SEAL RETAINER - 32MM
12	KCC60067	FORK JOUNCE BUMPER
13	KCCS0013	FORK SPRING GUIDE 32MM
14	KCCJ3221	STANDARD SPRING - FORK 0.21 KG/MM 32mm
14	KCCJ3218	LIGHT SPRING - FORK 0.18 KG/MM 32mm
14	KCCJ3225	HEAVY SPRING - FORK 0.25 KG/MM 32mm
15	HCNJ3824	NUT JAM 3/8-24 CLASS 8
16	KCC60068	RING CLIP - FORK SPRING GUIDE RETAINER
17	KAC60003	DAMPER ROD ASSEMBLY
18	KCC60058	O-RING MID-VALVE ADJ NEEDLE
19	KCC60050	FORK MID-VALVE ADJUSTER NEEDLE
20	KCC60051	SPRING - FORK ADJUSTER NEEDLE
21	KCCS0018	GLIDE RING - FORK PISTON - MID VALVE
22	HCNJ0601	6MM JAM NUT
23	BCKG0033	O-RING – 2MM ID
24	KCCS0033	ADJUSTER SCREW TOP 32MM
25	KCC60049	ADJUSTER PIN
26	KCMU0013	CARTRIDGE CAP
27	KCKG0050	TOP OUT SPRING
Not shown	KCCJ0002	TRAVEL LIMITER SPACER
28	KCKG0019	CARTRIDGE TUBE
29	KCMU0021	O-RING - FORK - BASE VALVE
30	ZCKGB017	O-RING - FORK BOTTOM PLUG
31	KCC60069	FORK BOTTOM PLUG – ADJUSTABLE
32	KCC60048	ADJUSTMENT SCREW – FORK BOTTOM PLUG
33	ZCMUOR03	O-RING – ADJUSTMENT SCREW
34	KCCS0031	RING CLIP – FORK ADJUSTMENT SCREW
35	KCCS0007	FORK GLIDE RING
36	KAMU0003	FORK LOWER – COMPLETE – BRAKE SIDE
TOOL	MCMUTL39	TOOL – FORK SEAL / SWIPER DRIVER – 32MM
TOOL	MCMUTL41	TOOL – FORK CAP WRENCH – 32MM
TOOL	MCMUTL04	TOOL – CARTRIDGE TUBE WRENCH

Parts – Forks – Leg Assembly – Non-Brake Side

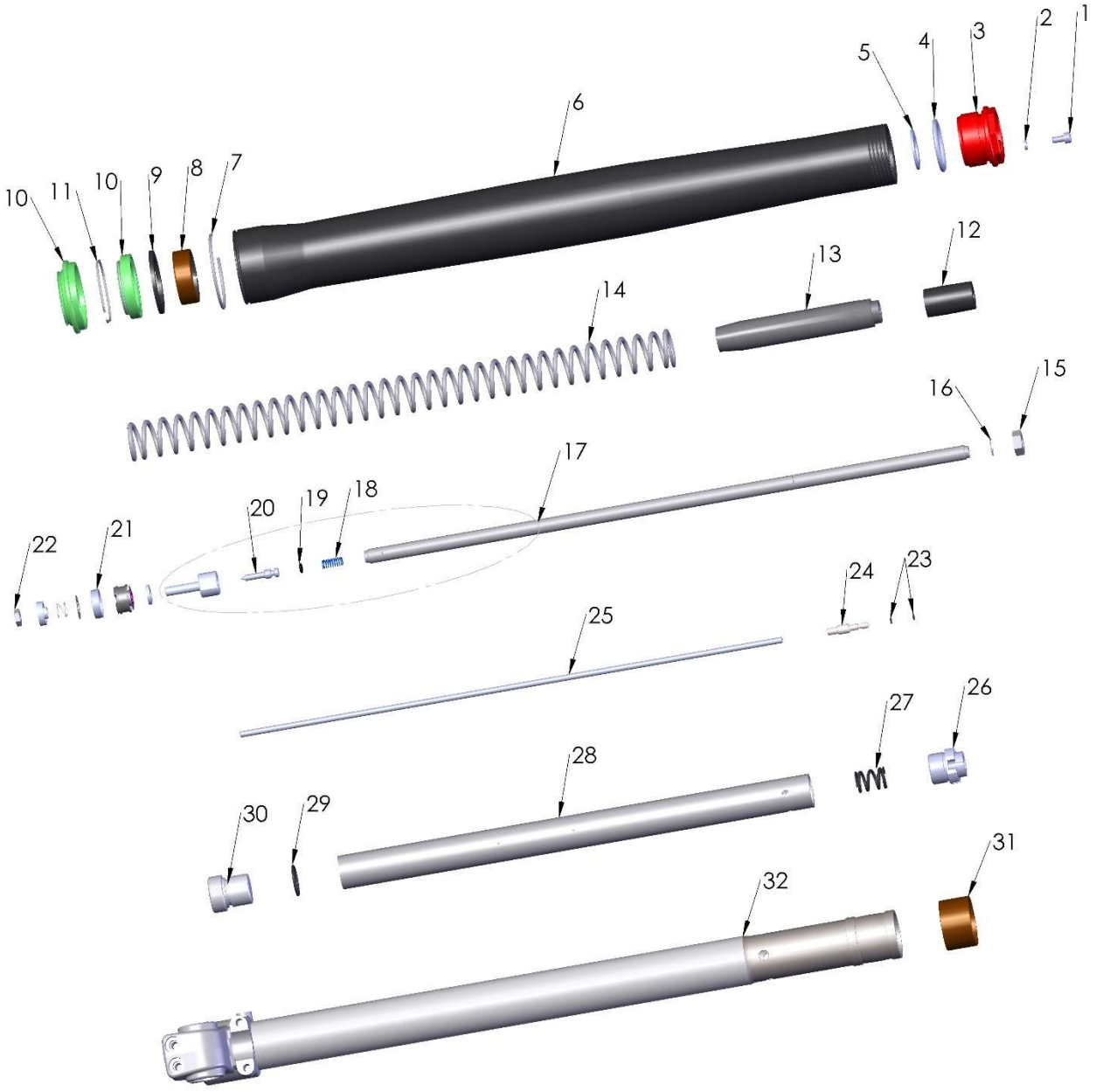

REF #	PART #	DESCRIPTION
1	HCBC0408	4 X 8 SHCS CLEAR ZINC
2	ZCKG0001	GASKET, BLEED SCREW FORK
3	KCCS0004S	FORK CAP – SMART LEG 32MM USD
4	ZCMUOR18	O-RING PV SOLENOID - CX65
5	KCCS0036	FORK - SPRING WEAR PLATE 32MM
6	KCCS0005	FORK - OUTER TUBE 32MM
7	KCCS0035	RING CLIP FORK OUTER WEAR RING 32MM
8	KCCS0006	FORK GLIDE RING BOTTOM 32MM
9	KCCS0032	FORK SEAL SPACER 32MM
11	KCCS0002	RING CLIP - FORK SEAL RETAINER - 32MM
12	KCC60067	FORK JOUNCE BUMPER
13	KCCS0013	FORK SPRING GUIDE 32MM
14	KCCJ3221	STANDARD SPRING - FORK 0.21 KG/MM 32mm
14	KCCJ3218	LIGHT SPRING - FORK 0.18 KG/MM 32mm
14	KCCJ3225	HEAVY SPRING - FORK 0.25 KG/MM 32mm
15	HCNJ3824	NUT JAM 3/8-24 CLASS 8
16	KCC60068	RING CLIP - FORK SPRING GUIDE RETAINER
17	KAC60003	DAMPER ROD ASSEMBLY
18	KCC60058	O-RING MID-VALVE ADJ NEEDLE
19	KCC60050	FORK MID-VALVE ADJUSTER NEEDLE
20	KCC60051	SPRING - FORK ADJUSTER NEEDLE
21	KCCS0018	GLIDE RING - FORK PISTON - MID VALVE
22	HCNJ0601	6MM JAM NUT
23	BCKG0033	O-RING – 2MM ID
24	KCCS0033	ADJUSTER SCREW TOP 32MM
25	KCC60049	ADJUSTER PIN
26	KCMU0013	CARTRIDGE CAP
27	KCKG0050	TOP OUT SPRING
Not shown	KCCJ0002	TRAVEL LIMITER SPACER
28	KCKG0019	FORK - CARTRIDGE TUBE
29	KCMU0021	O-RING - FORK - BASE VALVE
30	KCC60057	PLUG – FORK BOTTOM – SMART LEG
31	KCCS0007	FORK GLIDE RING
32	KAMU0004	FORK LOWER – COMPLETE – NON BRAKE SIDE
TOOL	MCMUTL39	TOOL – FORK SEAL / SWIPER DRIVER – 32MM
TOOL	MCMUTL32	TOOL – FORK CAP WRENCH – 32MM
TOOL	MCMUTL04	TOOL – CARTRIDGE TUBE WRENCH
KIT 1	KKCS0004	FORK – SEAL & SWIPER KIT – 32MM SKF

Parts – Frame – Mounting Hardware I

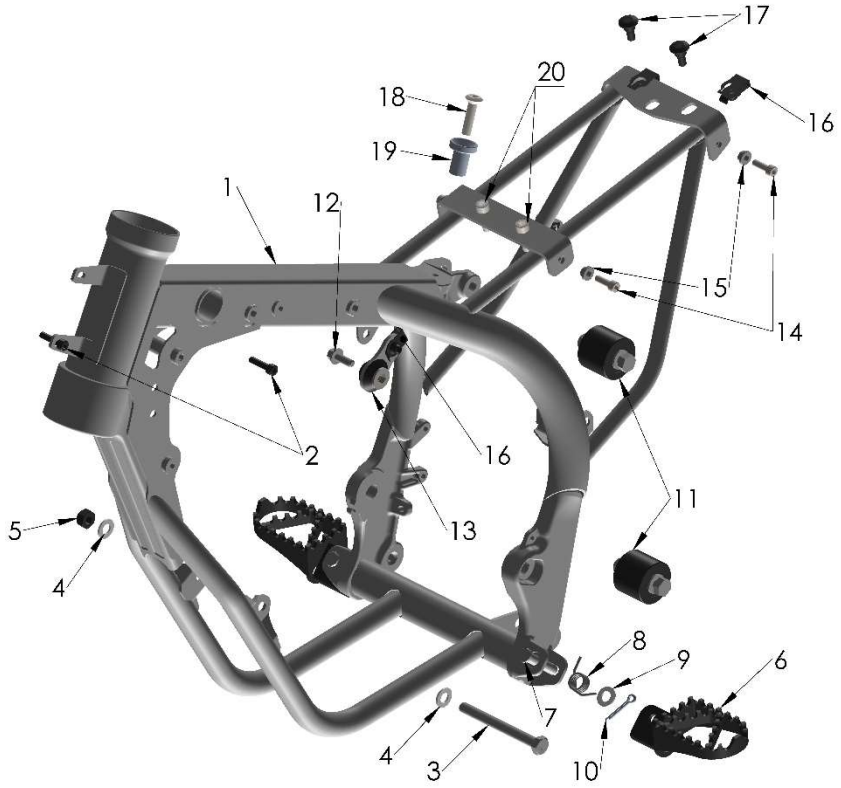

Frame – Engine, Swingarm, Tank, and Pipe Mounts		
REF #	**PART #**	**DESCRIPTION**
1	FACJ2025	FRAME 2025 CX50JR
2	HCBC0502	M5x 20mm SHCS
3	HCBH0880	M8x 80mm HEX BOLT
4	HCWF0802	8mm FLAT WASHER
5	HCNL0801	M8 LOCK NUT
6	TAMU0005	FOOTPEGS (PAIR) (STANDARD)
7	FCMU0031	CLEVIS PIN - FOOTPEG
8	TCMU0106	SPRING – FOOTPEG RETURN
9	HCWF0802	8mm FLAT WASHER
10	HCCP0008	COTTER PIN 1/8 X 3/4
11	FCC60020	CHAIN ROLLER
12	HCBF0616	M6X16mm FLANGE HEAD BOLT
13	XCMU0033	ISOLATION MOUNT – REAR PIPE MOUNT
14	HCBC0516	M5x 16mm SHCS
15	TCC60017	M5 BODY PANEL WASHER
16	HCHA0003	6mm CLIPNUT
17	HCSP0610	BOLT - FENDER FASTENER
18	HCSP0701	SPROCKET BOLT
19	TCMU0068	BUSHING – REAR TANK MOUNTING
20	HCBC0620	M6x 20mm SHCS

Parts – Front Brakes

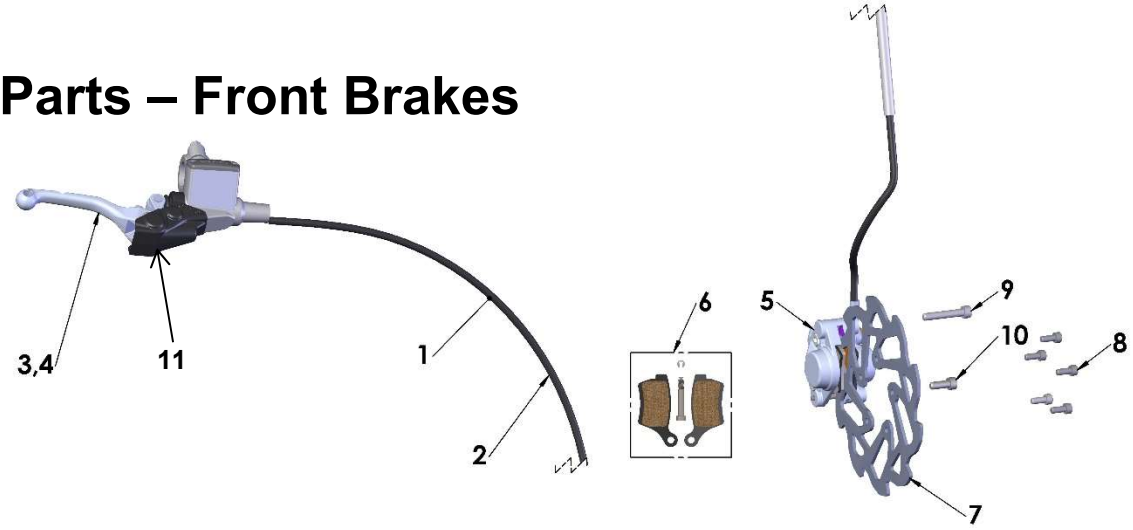

Front Brakes		
REF#	PART #	DESCRIPTION
1	BACJ0005	BRAKE ASSY – FRONT CARD – JR/P3
2	BCCJ0004	HOSE – BRAKE FRONT
3	BAMU0009	LEVER ASSEMBLY – THIN FORMLY
4	BAMU0006	MASTER CYLINDER ASSEMBLY 11.0 CARD
5	BAMU0020	CALIPER – FRONT – CARD 2 PISTON
6	BKMU0009	KIT 505 ORGANIC BRAKE PADS, WITH BOLT AND CLIP
7	BCMU0222	BRAKE ROTOR
8	HCBC0514	M5X14mm SOCKET HEAD CAP SCREW (5 REQ'D)
9	HCBC0635	M6X35mm SOCKET HEAD CAP SCREW
10	HCBC0620	M6X20mm SOCKET HEAD CAP SCREW
11	BCMU0116	COVER – MUD PROTECTION
Caliper Accessories		
ACCESSORY	BKMU0003	BLEED KIT (MULTIPLE SYRINGES, FITTINGS & HOSE)
ACCESSORY	BCMU0038	SPRING - BRAKE PAD RETURN
ACCESSORY	BKMU0006A	PISTON & SEAL KIT – CARD - ALUMINUM
ACCESSORY	BKMU0008	BLEED SCREW KIT – CARD
ACCESSORY	BKMU0007	BANJO BOLT AND WASHER KIT – CARD
ACCESSORY	BCMU0014	CALIPER ADJUSTMENT SHIMS 6mm ID
Master Cylinder Accessories		
ACCESSORY	BKC60008	CAP & BLADDER KIT ZL150
		(CAP, BLADDER & (2) M3-0.5 X 6mm LONG PHILLIPS SCREW)
ACCESSORY	BCC60058	CLAMP – M/C ZL150
ACCESSORY	HCBC0620	M6-1.0 X 22mm SOCKET HEAD CAP SCREW
ACCESSORY	BCMU0060	PIVOT BOLT
ACCESSORY	BCC60017	BOOT – PISTON END COVER
ACCESSORY	BKC60015	REBUILD KIT – MASTER CYLINDER CARD 11.0 mm
ACCESSORY		*(PISTON, SEALS, BUSHING, SPRING, CLIIP & RETAINING WASHER)*
ACCESSORY	HCSS0520	M5 X 20 SET SCREW – LEVER POSITON ADJUSTMENT
ACCESSORY	HCNJ0501	5MM LOCKNUT
ACCESSORY	CKC60005	PIVOT BOLT KIT – LEVER TO PIVOT BLOCK – MALE & FEMALE
ACCESSORY	HCSS0610	SET SCREW – PRESET
ACCESSORY	BCMU0059	LEVER ONLY – THIN FORMLY
ACCESSORY	CCC60026	SPRING – LEVER RETURN
ACCESSORY	CCC60025	SPACER – SPRING CENTERING

Parts – Front Wheel

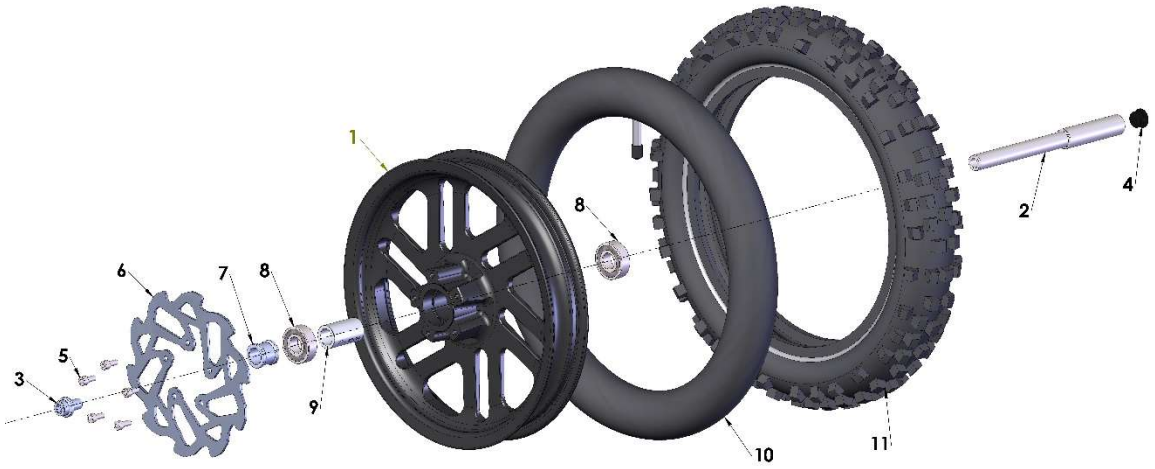

Front Wheel		
REF #	**PART #**	**DESCRIPTION**
1	WAMUF021BLK	WHEEL WITH BEARINGS SPOKE STYLE – BLACK ANODIZE
2	WCMU0043	FRONT AXLE - HOLLOW
3	HCSP1016M	BOLT – ALUMINUM AXLE PULL
4	WCMU0024	PLUG - BLACK PLASTIC
5	HCBC0514	M5X14mm SOCKET HEAD CAP SCREW (5 REQ'D)
6	BCMU0222	BRAKE ROTOR – FRONT & REAR
7	WCMU0045	WHEEL SPACER LEFT
8	WCMU0120	BEARING – WHEEL (2 REQ'D)
9	WCMU0044	SPACER – WHEEL FRONT
10	WCMUTU10	TUBE 10"
11	WCMU1050D34	TIRE - FRONT - 60/100-10 - DUNLOP MX34

Parts – Plastic & Seat

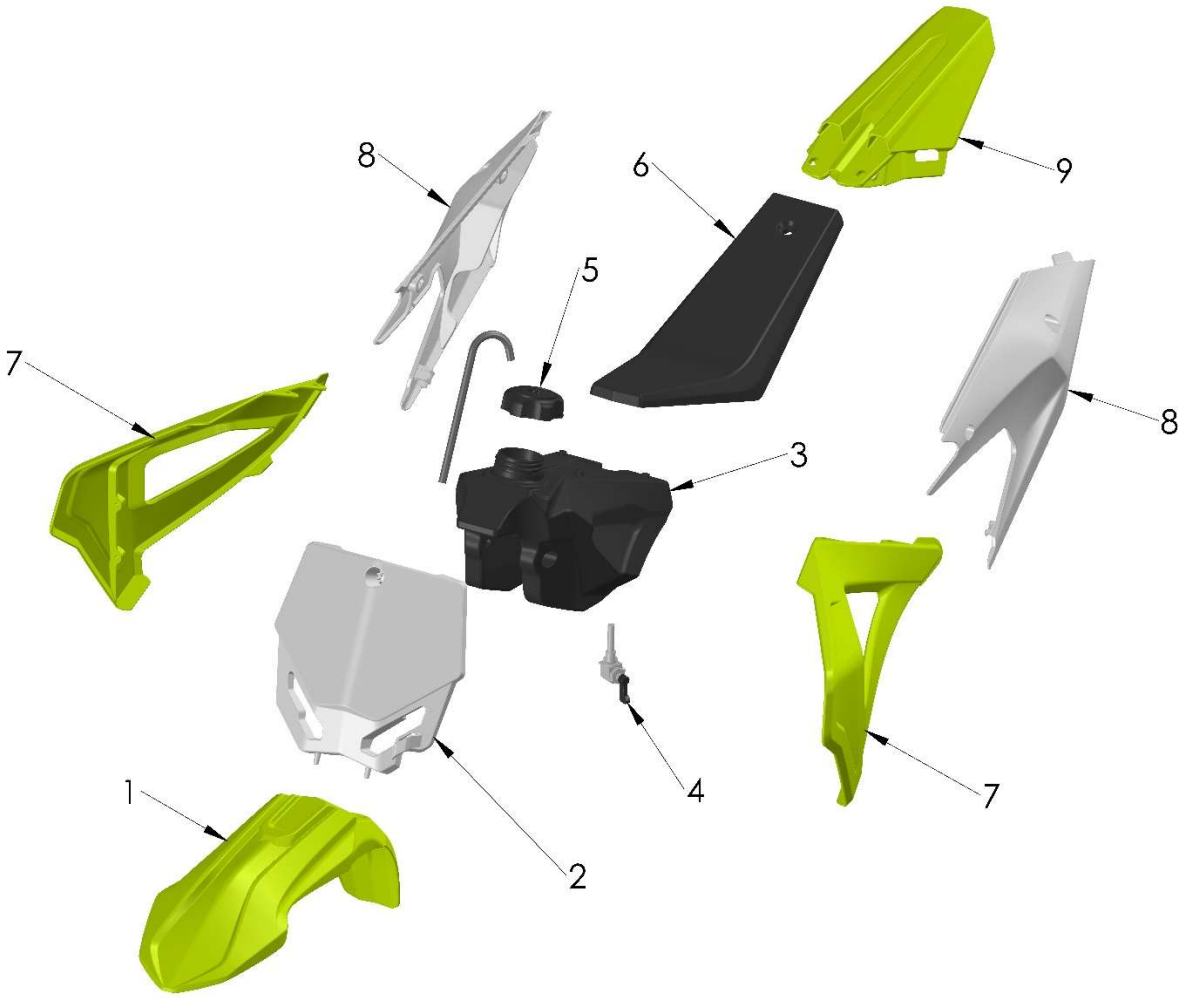

Parts – Plastic & Seat

Plastic and Seat		
REF #	**PART #**	**DESCRIPTION**
1	TCCS0009FXX	FRONT FENDER – FLO YELLOW
1	TCCS0009x	FRONT FENDER x – DENOTES COLOR BLK, WHT, YEL, FLO
1A	HCSP0610	FRONT FENDER MTG BOLTS (4 REQD)
2	TCMU0041W	FRONT NUMBER PLATE – WHITE
2	TCMU0041x	FRONT NUMBER PLATE x – DENOTES COLOR BLK, WHT, YEL
2A	HCSP0610	FRONT NUMBER PLATE MOUNTING BOLT
3	TCCJ0012	FUEL TANK – BLACK - (NO PETCOCK OR CAP)
3A	TCMU0047	FRONT TANK MOUNT BUSHING
3B	TCMU0017	FRONT TANK MOUNT BUSHING – SQUARE THREADED
3C	TCC60029	SPACER – SEAT MOUNT
3D	HCFH0620	M6X20mm FLAT HEAD – FRONT SEAT MOUNT
3E	HCFH0675	M6X75mm FLAT HEAD SCREW
4	TCMU0151	PETCOCK
5	TCHA0002	CAP – FUEL TANK
5A	TCHA0003	HOSE – FUEL CAP
6	TACS2025	SEAT – KING CX50 – FLAT BAK
6A	TCCS0018	COVER – SEAT – KING CX50 – FLAT BAK
6B	TCMU0046BLK	SPECIAL WASHER – SEAT HOLDING – BLACK
6C	HCFH0650	M6X50 FLAT HEAD, REAR MOUNTING BOLT
7	TCMU0043FXX	SHROUD – MEGA FLO YELLOW
7	TCMU0043x	SHROUD LEFT x – DENOTES COLOR BLK, WHT, YEL, FLO
7A	HCSP0004	PLASCREW – SHROUD TO TANK (4 REQ'D)
8	TCMU0065WHT	NUMBER PLATE PAIR – WHITE
8	TCMU0065x	NUMBER PLATE PAIR x – DENOTES COLOR BLK, WHT, YEL
8A	HCBC0514	M5X14 SOCKET HEAD CAP SCREW (2 REQ'D PER SIDE)
8B	TCC60017	BODY PANEL WASHER 5MM (2 REQ'D PER SIDE)
8C	HCCN0000	5MM EXTRUDED "U" NUT
9	TCMU0055FXX	REAR FENDER – MEGA FLO YELLOW – FLAT BAK SEAT
9	TCMU0055x	REAR FENDER x – DENOTES COLOR BLK, WHT, YEL, FLO
9A	HCSP0610BLK	BOLT – SPECIAL
9B	HCHA0003	CLIP NUT – 6mm
10	KCMU0035	FORK GUARD SET – 2021
10A	HCSP0610BLK	BOLT - FORK GUARD - BLACK (6 REQ'D,)
11	KCMU0036	BRAKELINE CLAMP
ACC'Y	TCCJ2025	GRAPHIC KIT
ACC'Y	TKCJ2025	BODYWORK KIT - JR – FXX W WHITE NUMBER PLATES
ACC'Y	TKCJ2025FXX	BODYWORK KIT - JR - FXX
ACC'Y	TKCJ2025BLK	BODYWORK KIT - JR - BLACK
ACC'Y	TKCJ2025WHT	BODYWORK KIT - JR - WHITE

Parts – Rear Brake

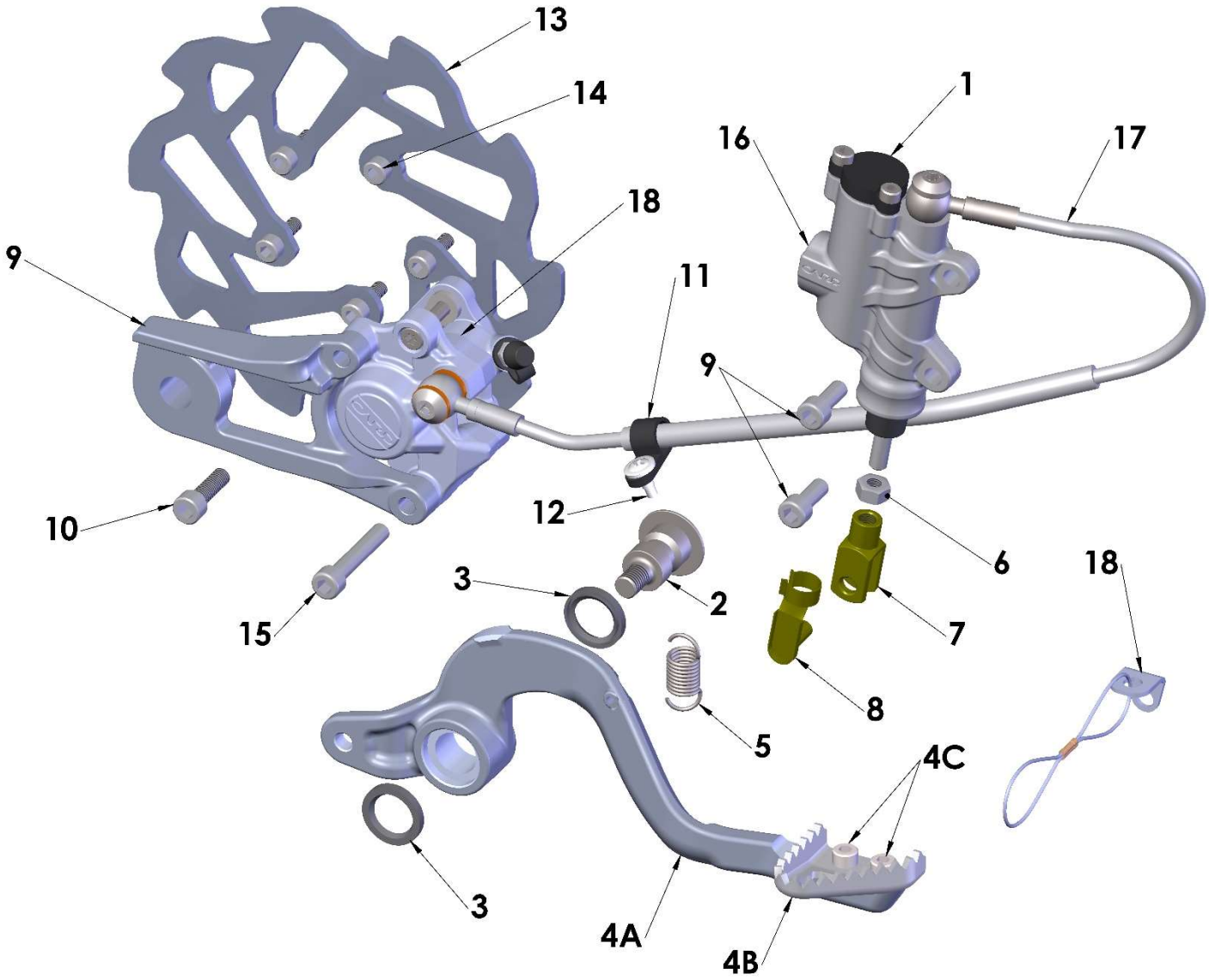

Parts – Rear Brake

Rear Brake System		
REF #	PART #	DESCRIPTION
1	BACJ0004	BRAKE SYSTEM – REAR (M/C-LINE-CALIPER)
2	BCMU0027	BRAKE PIVOT BOLT
3	BCMU0501	SEAL – BRAKE PEDAL (2 REQ'D)
4A	BCMU0069	BRAKE PEDAL – ASSEMBLY 50cc – WITH TOE PIECE
4B	BCMU0023T	TOE PIECE
4C	HCBC0512	M5X 12mm SOCKET HEAD CAP SCREW
5	BCMUSP01	BRAKE RETURN SPRING
6	HCNS0601	M6 NUT
7	BCMU0015A	BRAKE CLEVIS
8	BCMU0015B	BRAKE RETAINING SPRING PIN
9	BCMU0045	BRAKE CARRIER – CARD 2 PISTON – CX50
10	HCBC0620	M6X20mm SOCKET HEAD CAP SCREW
11	HCCC0000	BRAKE HOSE CLAMP
12	HCPP0832	BRAKE HOSE CLAMP FASTENER
13	BCMU0222	BRAKE ROTOR
14	HCBC0514	M5X14mm SOCKET HEAD CAP SCREWS (5 REQ'D)
15	HCBF0635	M6X35mm SOCKET HEAD CAP SCREW
16	BACJ0006	MASTER CYLINDER – REAR – CAPTURED CLEVIS
17	BCMU0061B	REPLACEMENT BRAKE HOSE
18	BAMU0010A	CALIPER ASSEMBLY – REAR BRAKE – CARD 2 PISTON – ALUM
19	BAMU0015	BRAKE SNAKE
ACCESSORY	BKMU0009	PAD SET ORGANIC W BOLT AND CLIP
ACCESSORY	BCMU0038	SPRING - BRAKE PAD RETURN
ACCESSORY	BKMU0006A	PISTON & SEAL KIT – CARD - ALUMINUM
ACCESSORY	BKMU0008	BLEED SCREW KIT – CARD
ACCESSORY	BCC60034	RUBBER CAP ONLY - BLEED SCREW CX65
ACCESSORY	HCBB0640	BRAKE PLUNGER BOLT – JR ONLY
ACCESSORY	BKMU0013	CAP & SEAL KIT – MASTER CYLINDER
ACCESSORY	BKMU0014	REBUILD KIT – REAR MASTER CYLINDER – CAPTURED
ACCESSORY	BKMU0007	BANJO BOLT AND WASHER KIT – CARD
ACCESSORY	BCMU0014	CALIPER ADJUSTMENT SHIMS 6mm ID
TOOL	BKMU0003	BLEEDING KIT – FORMULA & CARD

Parts – Rear Wheel

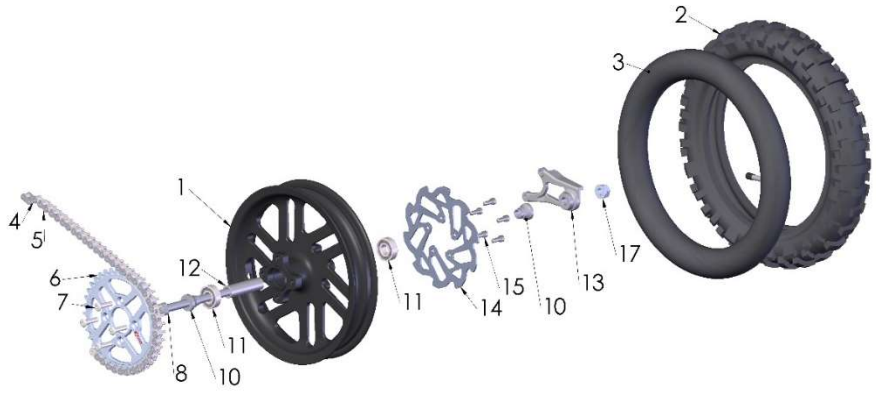

Rear Wheel		
REF #	**PART #**	**DESCRIPTION**
1	WAMUR021BLK	REAR WHEEL W/BEARINGS – BLACK ANODIZE
2	WCMU1075D34	TIRE - REAR - 70/100-10 - DUNLOP MX34
3	WCMUTU10	TUBE, 10"
4	PCMU0001	MASTER LINK 420
5	PCMU0088	CHAIN 420 X 88
6	PCC50138	38T SPROCKET (STANDARD)
6A	PCC501xx	SPROCKET xx DENOTES TEETH – RANGE OF TEETH (35-40)
7	HCSP0701	M7X30mm SPECIAL HEAD BOLT (4 REQ'D)
7A	HCWF0701	7mm FLAT WASHER (4 REQ'D)
7B	HCNL0701	M7 LOCKNUT (4 REQ'D)
8	WCMU0016	REAR AXLE
10	WCMU0101	WHEEL SPACER (2 REQ'D)
11	WCMU0120	WHEEL BEARING (2 REQ'D)
12	WCMU0041	WHEEL BEARING SPACER
13	BCMU0045	CARRIER - BRAKE
14	BCMU0222	BRAKE ROTOR
15	HCBC0514	M5X14mm SOCKET HEAD CAP SCREWS (5 REQ'D)
16	HCWF1202	AXLE WASHER
17	HCNL1201	AXLE NUT 12MM
ACCESSORY	HKMU0002	BOLT KIT – REAR SPROCKET

Parts – Shock

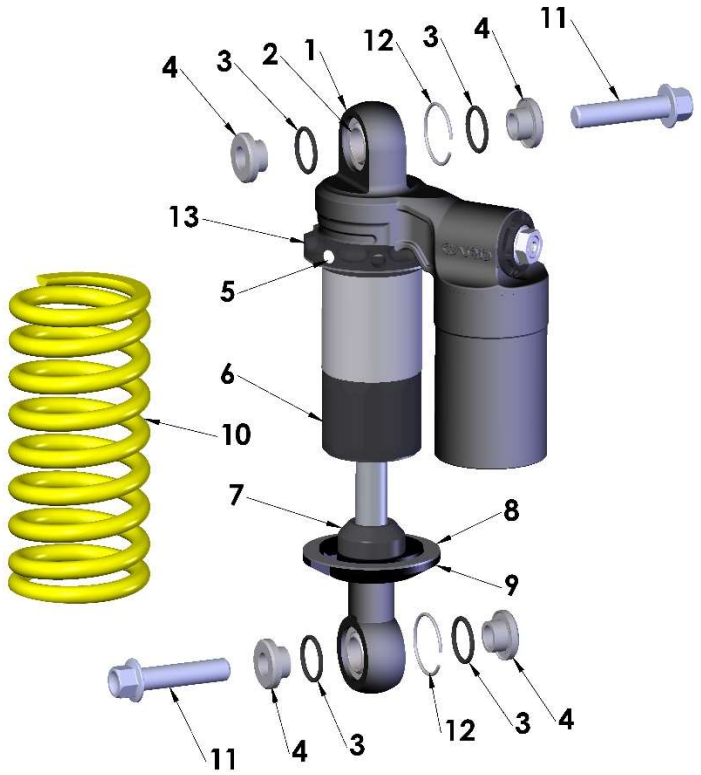

Rear Shock		
REF#	**PART #**	**DESCRIPTION**
1	SACJ2025	SHOCK ABSORBER
2	SCMU0043	SHOCK – BEARING SPERICAL SHOCK MOUNT – (2REQ'D)
3	SCMU0039	O-RING – SHOCK – BUSHING (4 REQ'D)
4	SCMU0042	SHOCK – MOUNT BUSHING (4 REQ'D)
5	SCMU0058	SHOCK – WHITE NYLON TIP SET SCREW M6-1.0
6	SCMU0056	SHOCK – SLEEVE BLACK
7	SCCJ0004	BUMPER – JR - CARD SHOCK
8	SCMU0040	SHOCK – SPRING PAD
9	SCMU0054	SHOCK SPRING PERCH
10	SCMUOH05	SPRING – STANDARD (285 lb/in)
10	SCMUOH04	SPRING – LIGHT (275 lb/in)
10	SCMUOH06	SPRING – HEAVY (295 lb/in)
11	HCBF1039	M10X39 FLANGE HEAD BOLT
12	SCMU0330	RING -SPERICAL BEARING RETAINING -CARD SHOCKS
13	SCMU0120	PRELOAD ADJUSTER – CARD SHOCK
ACCESSORY	SKC60002	REBUILD KIT – CARD SHOCK

Parts – Shock - Internal

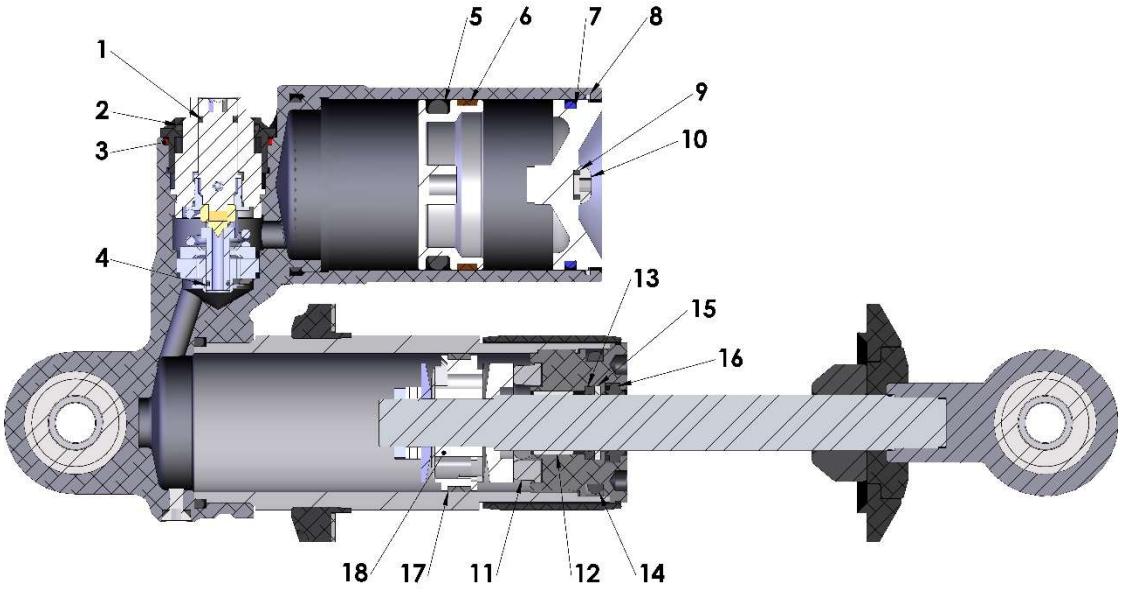

Rear Shock		
REF#	**PART #**	**DESCRIPTION**
1	SCMU0037	O-RING LOW SPEED COMP ADJUSTER
2	SCMU0038	O-RING HIGH SPEED COMP ADJUSTER
3	SCMU0036	O-RING COMP ADJUSTER CAP
4	SCC60007	O-RING COMPRESSION ADJUSTER
5	SCMU0051	O-RING – IFP
6	SCMU0052	IFP SEAL BAND
7	SCMU0033	O-RING SHOCK BASE
8	SCMU0050	RESERVOIR CAP RETAINER RING
9	SCMU0035	O-RING CHARGE CAP
10	HCBB0506	M5 X 6mm LONG BUTTON HEAD STAINLESS STEEL
11	SCMU0044	SEAL HEAD BUMPER
12	SCMU0048	SHAFT BUSHING
13	SCMU0046	X-RING SEAL
14	SCMU0034	O-RING SEAL HEAD
15	SCMU0047	SPACER - X-RING
16	SCMU0045	DUST SEAL
17	SCC60014	PISTON BAND
18	SCMU0091	PISTON - SHOCK
	SCCM0001	SEAL HEAD – WITHOUT COMPONENTS
	SKMU0002	SEAL HEAD - COMPLETE
ACCESSORY	SKC60002	REBUILD KIT – CARD SHOCK

Parts – Swingarm Assembly

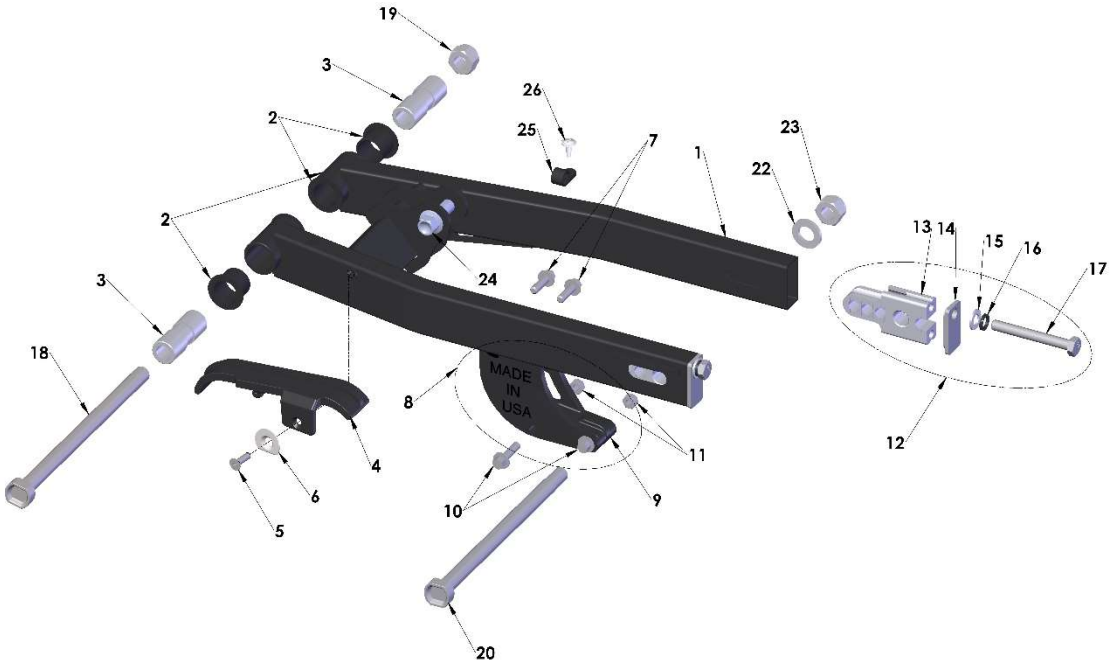

Swingarm		
REF #	**PART #**	**DESCRIPTION**
1	GAMU2025	SWINGARM – BLACK – 2025 -
2	GCMU0001	SWINGARM BUSHING (SINGLE PIECE) (4 REQ'D)
3	GCCS0001	SPACER - PIVOT TUBE (2REQ'D)
4	GCMU0041	SWINGARM CHAIN GUARD - CX50 - WITH MOHAWK AND FOOT
5	HCFH0512	M5X12mm FLAT HEAD SCREW
6	HCWF0501	5mm FLAT WASHER
7	HCBF0620	M6X20mm FLANGE HEAD BOLT (2 REQ'D)
8	PAKG0001	CHAIN GUIDE – ASSEMBLY COMPLETE
9	PMU0060MP	CHAIN GUIDE - BOTTOM SLIDER & INSIDE
10	HCBF0625	M6X25mm FLANGE HEAD BOLT (2 REQ'D)
11	HCNL0601	M6 LOCKNUT (2 REQ'D)
12	FAMU0005	WHEEL PULL ASSEMBLY (BLOCK, CAP, BOLT, AND WASHER)
13	FCMU0203	WHEEL PULL
14	FCMU0202	WHEEL PULL ENDCAP
15	HCWF0802	8mm FLAT WASHER
16	HCWL0802	8mm LOCK WASHER
17	HCBH0810	M8X65mm HEX HEAD BOLT (FULL THREAD)
18	HCBH1203	SWINGARM PIVOT BOLT
19	HCNL1201	M12 LOCK NUT
20	WCMU0016	AXLE BOLT 195mm
22	HCNL1201	AXLE WASHER
23	HCNL1201	M12 LOCK NUT
24	HCBF1039	M10X39mm FLANGE HEAD BOLT
25	HCCC0006	CLAMP - BRAKE HOSE
26	HCPP0832	FASTENER – ½" SELF TAPPING

Service

Trained technicians with precision gauging and proper assembly fixtures carefully assemble all Cobra engines to specific tolerances. If you feel you have the skills, and the appropriate tools, to perform the following service tasks please follow the instructions closely. The part numbers are listed throughout to help you when ordering parts from your local Cobra dealer.

If you do not feel comfortable with the service work log on to:
www.cobramoto.com to find a cobra dealer or call **517-437-9100**.

Engine Service

One method for determining whether the top end of your engine needs rebuilt is to perform a wide open throttle kicking compression test. Before performing the procedure please read the caution notes below.

CAUTION:

- There is a large wide range of variability in reading compression gauges.
- The head volume of this Cobra Motorcycle is very small and requires 20 kicks before you establish the most accurate reading possible.
- Because of the geometry of the spark plug used in this Cobra Motorcycle, the adapter used with your compression tester must have a similar volume protruding into the combustion chamber to establish an accurate value.
- Length of hose on the compression tester will affect the reading. The shorter the hose length the more accurate your reading will be.

Because of these difficulties in measuring an *absolute* compression value, a useful *relative* value can be achieved by testing your bike's compression with your own particular gauge after a new top end or when the bike is new so that you know what your particular gauge reads on a 'fresh' engine. When it has dropped to 90% of its original value the engine will be down on power and would benefit from a rebuild. When it's dropped to 80% it really needs rebuilt! Using the table below will help you determine monitor the condition of your top end.

	Engine is Fresh Measured Value	Engine Down on Power Measured Value * 0.9	Engine NEEDS Rebuilt Measured Value * 0.8
Example	110 psi	110 psi * 0.9 = 99 psi	110 psi * 0.8 = 88 psi
Your Values			

Procedure for Compression Testing

1. Shut off the fuel petcock.
2. Install the compression gauge into the spark plug hole.
3. Hold the throttle wide open, and kick repeatedly (approximately 20 times) or until the gauge reading does not increase in value with each kick.

Base Gasket Selection

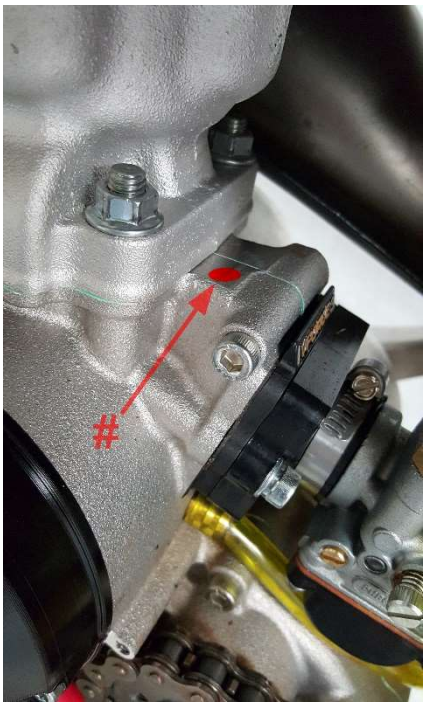

Figure 21

Tools required

- 17mm wrench
- 1mm flexible solder material
- measurement calipers

When rebuilding the 'top end' of your Cobra motorcycle, care must be taken to ensure the proper squish clearance. Squish clearance is defined as the minimum distance between cylinder head and piston at TDC, and there are negative effects of either having too much or too little clearance. Since parts like the crank, connecting rod, cylinder head, piston, and crankcases all have varying tolerances, Cobra offers several different base gasket thickness' to ensure that you can always set the squish clearance of your engine to factory specifications.

For base gasket replacement use the code (see figure 21 for location) along with the table on the following page reorder the correct thickness gasket.

Code	Supplied Base Gasket Thickness		Cobra #
#	mm	inch	Part #
2	0.2	0.010	ZCMU0102
3	0.3	0.012	ZCMU0103
4	0.4	0.015	ZCMU0104
5	0.5	0.020	ZCMU0105
6	0.6	0.024	ZCMU0106
8	0.8	0.031	ZCMU0108

NOTE: Tolerances will affect the actual gasket thicknesses.
If during the course of the maintenance more parts than the base gasket are changed, the squish clearance should be measured, and possibly a different base gasket will be required.

The easiest way to measure squish clearance is with 1mm to 1.5mm thick flexible solder wire (available through most popular electronic stores). The process is as follows:

- Assemble the top end of the engine with either; 1) the crankcase stamp recommended base gasket or, 2) if assembling with a new set of cases assemble with a 0.4mm (0.015") base gasket, and torque the head nuts to the

proper torque specifications leaving off the spark plug and ignition cover (piston rings can be left off to ease of assembly).

- Carefully insert the solder wire though the spark plug hole, into the cylinder far enough such that the tip of the wire touches the left or right side cylinder wall (not the front or back as the piston will rock more and give incorrect measurement).
- Hold the wire at this position and rotate the crankshaft, by the flywheel nut (or kick lever) three revolutions to crush the solder wire.

CAUTION:
If you rotate the flywheel nut in a counterclockwise direction there is a risk of loosening the nut.

- Pull out the wire and measure the solder thickness at the thinnest location near its tip accurately with the thin tips of calipers.
- Adjust base gasket thickness as necessary to get the desired value.

Upon completion, your final assembly squish clearance should agree with the chart below:

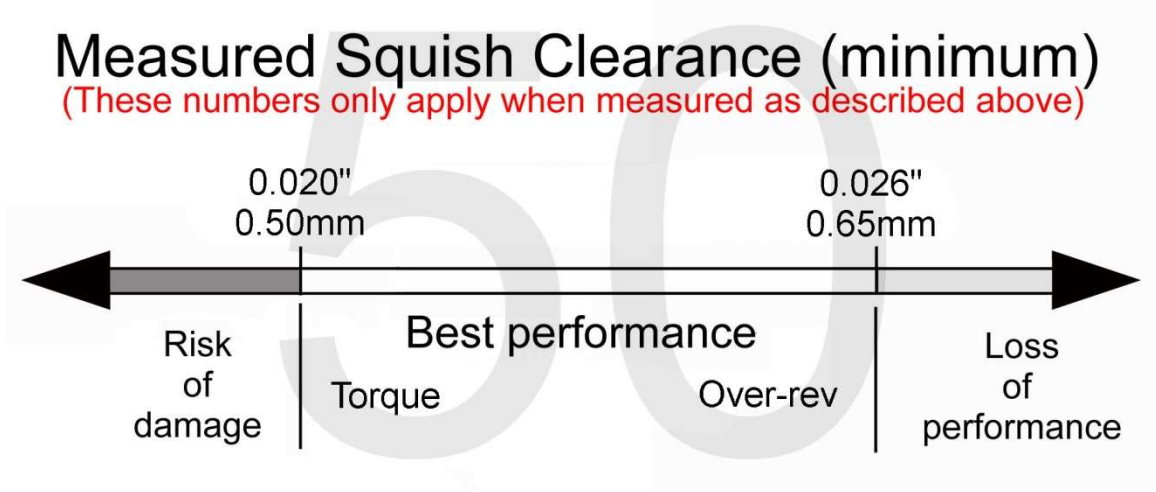

CFD Adjustment

This section tells you what to do if you have tested and determined that the CFD requires adjustment.

Tools required
- 5mm & 10mm hex key
- Pliers to remove the old cotter key
- A new cotter key (Cobra MIL spec recommended – Hardware store ones will become brittle from the hot oil and randomly fail)
- 19mm socket
- Cobra gear stop tool (EAMU0004)

Procedure
1. Drain the oil into a suitable container for recycling (10mm hex key)
2. Remove the clutch side cover (5mm hex key)
3. Remove the cotter pin from the castle nut in the CFD assembly.

NOTE: The CFD castle nut is “left hand thread”. Turn it counter clockwise (anti-clockwise for you Europeans) to tighten it.

4. Tighten the castle nut to the next cotter pin assembly location.
5. With the internal CFD gear stop tool in position check the slip torque again (it is NOT necessary to have the cotter pin for the test)
6. If the slip torque is below 108 Nm (80 ft-lb) then repeat steps 5 and 6 above.
7. Once the slip torque is at the desired value, install the cotter pin as shown.
8. Remove the CFD gear stop tool
9. Reinstall the clutch cover
10. Fill the clutch case with 300cc Clutch Milk and the bike is ready to race



Engine Removal

To service the bottom end and transmission, the engine must be removed from the frame.

Tools required
- 10, 11, 13, 22 mm wrench
- 8, 10, 14, 17 & 19 mm sockets
- 3, 4 & 5 mm hex key
- 7 mm nut driver, flat or Phillip, screwdriver for hose clamps
- Spring remover
- Flywheel / clutch puller (#MCMUTL70)
- Clutch nut removal tool (#ECMU0078)
- CFD gear stop (#EAMU0004)

Procedure

1. Remove the seat.
2. Turn of the fuel at the petcock and disconnect the fuel line.
3. Remove the tank (8 mm socket).
4. Remove the carburetor from the inlet (flat head or Phillips head screwdriver, 7 mm nut driver).
5. Remove the silencer & pipe (spring remover, 8mm socket).
6. Locate a suitable container for the engine coolant and disconnect the coolant lines connected to the engine (8 mm socket).

NOTE: If the coolant looks to be free of contaminates it may be reused.

7. Remove the master link from the chain.
8. Remove front engine mount bolt (13 mm socket, 6 mm hex key).
9. Remove the swingarm bolt (19mm socket).

NOTE: Only drive the swingarm bolt far enough to clear the engine, leave it holding the one side of the swingarm to the frame

10. Remove the engine from the right side of the frame.

NOTE: If you are merely performing a top end service skip ahead to *Top End Disassembly Procedure*.

Complete Engine Disassembly Procedure

1. Remove the ignition cover (3mm hex key)
2. Remove the bolt from the water pump shaft (4mm) and slide off the belt cover and the water pump belt
3. Using a flywheel holding tool and 14 mm socket remove the nut that secures the flywheel.
4. Using the Cobra flywheel / clutch puller (#MCMUTL70), remove the flywheel from the crankshaft.
5. Remove the stator (4mm hex key).
6. Remove the clutch nut / starter gear that holds on the clutch (#ECMU0078).
7. With the Cobra flywheel / clutch puller (#MCMUTL70), remove the clutch from the crankshaft (details in Clutch Service portion of this manual).
8. Remove the **left hand thread** nut holding the CFD to the transmission input shaft using the CFD gear stop (#EAMU0004) and a 19mm socket.

Top End Disassembly Procedure

1. Remove the cylinder head nuts (10mm).
2. Remove the cylinder head outer.

INSPECTION NOTE:
Inspect the cylinder head for deposits and abrasions.

1. If there are deposits they should be removed
    a. Black oily deposits (indicating a rich mixture or improper oil type/quantity) can be removed with solvent
    b. Crusty deposits (indicating dirt ingestion) can be removed with solvent and may require some scraping.
2. Abrasions
    a. Pitting or erosion indicates detonation and may require cylinder head replacement, also
        i. Retard the ignition timing
        ii. Use a higher octane fuel
    b. Missing chunks or indentations indicate broken hardware or ingested items - replace the cylinder head.

3. Remove the cylinder head insert.
4. Remove the cylinder.

INSPECTION NOTE:
Inspect the cylinder bore for abrasions, deposits, and missing coating.

1. If abrasions: scrapes, scratches, pitting, etc… are found, replace the cylinder.
2. If deposits are all are found
    a. Clean with muriatic acid.
    b. Once the deposits are removed, inspect for abrasions and missing surface coating.
        i. If there are abrasions or missing coating, replace.
        ii. If all looks well, the cylinder may be saved.

⚠ WARNING
Muriatic acid can be dangerous. Follow the manufacturer's instructions closely.

5. Remove the piston clip with a scribe.
6. Remove the piston pin with a piston pin remover.

INSPECTION NOTE:
Inspect the piston for abrasions and deposits on the top and sides and clean or replace as necessary.
INSPECTION NOTE:
Piston ring end gap should be between 0.010" (0.25 mm) and 0.015" (0.4 mm)

Splitting the Cases

1. Remove the fasteners holding the two halves of the crankcase together.
2. Separate the cases with a proper case splitting tools.

CAUTION:
Take caution when handling the crankshaft. It is the main power transfer to the rest of the engine. If it is out of alignment, it will cause premature failure of your bearings which can lead to serious damage to the cylinder as well as the rest of the engine. Do not try to true the crank yourself. Truing the crank should be done professionally.

CAUTION:
- If you split the cases, check the gear tooth faces for chipping & signs of fatigue.
- Check all the bearing for smooth noise free operation.

Engine assembly

CAUTION:
For any seals that are to be installed, apply a light amount of grease to the seals' ID, assembly lube on all bearings and a small amount of Loctite to the OD.

1. Press the three bearings into the respective holes in each case half.
2. Press in the crank seals such that the concave side faces the crank weights.
3. Press in the counter shaft seal (concave side faces inside of transmission)
4. Press in the water pump assembly
5. Tap both ways axially then verify easy rotation.
6. Inspect the crankshaft for proper true geometry (no more than 0.002 ", 0.05mm, measured at bearing journal area while supported from the ends).
7. Insert the case bolts with the proper lengths at locations shown.
8. Torque to 12Nm (105in-lb). Starting toward the center working outward.
9. Trim away any excess gasket material if necessary.

NOTE: Check engine mount holes for excess material that may cause problems in engine installation.

10. Install the piston with new wrist pin bearing and, pin and clips.

CAUTION:
Be sure to install the piston such that the arrow on the top piston surface points to the exhaust (front of bike/engine) and put assembly lube on the connecting rod bearing.

11. Install the piston rings.

CAUTION:
Ring end gap should be no less than 0.010" (0.25mm) and no more than 0.015" (0.4mm).

12. Install the base gasket.

CAUTION:
See base gasket selection at the beginning of service section.

13. Install the cylinder being sure that the piston rings are properly aligned with the indexing pins.

CAUTION:
Never force the cylinder. If resistance is felt, determine the problem and solve it. Once installed slightly rotate the cylinder back and forth insuring that the rings are properly seated.

14. Install cylinder head insert.

NOTE: A light application of silicone grease can help hold the O-rings into position during assembly.

15. Install O-RINGs as shown in the Parts-Engine Top End page.
16. Install the cylinder head.
17. Install the flange nuts. Torque to 123 in-lb (14 Nm)
18. Install reed and intake manifold with new gasket. Torque to 55 in-lb. (6.2 Nm).

CAUTION:
The intake manifold bolts will require being checked and torque values reset after a few heat cycles.

19. Leak check the engine to 20 psi to ensure proper seal.
20. Install stator reinstalling the grommet and wires (snug the bolts).
21. Install the rotor per *Rotor Installation* section, under the *S3: Ignition* portion of this manual.
22. If necessary install the water pump outlet pipe (apply gray Permatex gasket maker to the threads before assembly).
23. Install the CFD.
24. Install the clutch per *Clutch Installation* section in this manual.
25. Install the coolant drain plug.
26. Make sure that the exhaust spacer is on the cylinder (53 in-lb, 6 Nm).
27. Install the spark plug with a fresh gasket (to apply the proper torque to the spark plug when inserting, one must first screw the spark plug in until the metal gasket ring causes resistance and then turn another 1/8 to ¼ turn).

Clutch

The sleeve bolts of the 5GX provide a low uniform stress, minimal heat transfer, and allow channels for flushing the clutch fibers out of the washer stacks allowing a long time between part replacement provided you operate with 10 oz of clean Clutch Milk.

All washer stacks are double sorted at the factory. They are first sorted by measured height. Secondly, each stack with bolt is sorted by measured

engagement force. The stacks in each set of three will measure within 0.05mm (0.002”).

There are many variables in an automatic centrifugal clutch. These variables are set to world class standards from the factory but will change over time as the components wear, relax, and just plain get used.

Tools recommended for clutch service:

- Universal clutch puller- a universal puller that pulls the clutch, main drive gear and rotor. (Part # MCMUTL70).
- 5mm T-handle
- T25 Torx
- Accurate torque wrench in the range of 16 Nm (12 ft-lb, 144 in-lb).
- Clutch nut removal tool (ECMU0078) & piston stop (MCMUTL03).
- *Cobra 3 Shoe Clutch Milk* (Part # MCMUGF32).

CLUTCH REMOVAL:

1. Drain the engine transmission oil and remove the clutch cover.
2. Remove the clutch nut (NOT left hand thread) on the end of the crankshaft with the clutch nut removal tool.

CAUTION:
It is possible to cause damage to the piston when using the piston stop. Care must be used when removing and installing the clutch arbor and using the piston stop.

3. Attach the Universal Puller. There are three 6mm clutch puller holes located on the ends of the center hub.
4. Install each of the 3 6mm x 55mmsocket head cap screws (clutch cover bolts can be used) until each is similarly snug and the puller looks square to the end of the crank
5. One at a time, tighten each of the 1/4 turn until the clutch 'pops' off



NOTE: It may be helpful to use a screwdriver or similar device in the side hole of the puller to stop rotation

CAUTION:
Do not use a jaw type puller.

CLUTCH WASHER STACKUPS:

Once the clutch is removed, and cool to touch, carefully put it into a vice and remove the center shoulder bolt out of each clutch shoe. You WILL have to heat the center hub again to remove the bolts. Once you get a bolt loosened, carefully remove it with the shoe and observe the way the spring washers are stacked. Clean the washers and bolt if you intend to reuse.

CAUTION:
You **should apply heat** to the arbor near the clutch bolt threads or you will very likely break the Torx bit upon attempted removal.

CAUTION:
It is easy to prematurely damage the clutch and other engine components with improper clutch adjustment. If you are unsure of how to adjust the clutch, contact the Cobra Technical Support Group before making adjustments.

Clutch shoe wear:

- This can be measured by the overall diameter of the shoes installed on the arbor. This measurement should be greater than 80.5mm
- If the clutch has been slipping and shows signs of glazing, it is best to replace the shoes. We have found that once the shoes are glazed, even if deglazed with emery paper or a file, the performance is reduced.
- The best way to prevent glazing is by not gearing too high, changing the oil as specified and by not blipping the throttle. Every time you blip the throttle, you are working your clutch springs.

Clutch basket wear:

- The internal diameter of a new clutch basket should measure ˜84.10mm. Over time the clutch shoes will wear the internal surface down creating a bigger ID and causing a later engagement. The maximum ID we recommend to allow is 84.25mm.

CAUTION:
The clutch produces a tremendous amount of heat and when a rider is blipping the throttle. This makes the clutch and clutch springs wear out quicker. This also makes your engine tend to run hotter which decreases engine power. It is important to train your rider ***NOT*** to be a **throttle 'blipper'**.

CLUTCH ASSEMBLY:

1. Start with a new set of pre- assembled washer stacks or a cleaned, reassembled set of washer stacks and bolts.

CAUTION:
It is also important that all three shoes are stacked the same. (See figure 32)

2. Clean the threads of the stack bolt and the clutch with brake cleaner removing all old thread locking material.
3. Assemble the stacks and shoes on the arbor using high strength thread lock material to the stack bolt and tighten to 16 Nm (12 ft-lb, 144 in-lb).

CAUTION:
Avoid allowing excess thread lock material to contact the spring washers and the clutch or the clutch is likely to malfunction.

4. Clean the threads of the crank shaft and the clutch nut.
5. Install the clutch arbor on the crank. Making sure that the backing spacer in place on the crank.
6. Apply high strength thread locking agent to the threads and install the clutch nut and torque to 40 ft-lb (54Nm).

INSPECTION NOTE:

- There must be in / out play in installed clutch, 0.3mm to 1.0 mm (0.012" to 0.040").
- This should be adjusted with the ECMU0040T and ECMU0040 shims
- A blue clutch drum is worn out from excessive slippage or improper lubrication.

7. Install the clutch cover tightening the bolts from inside out. (8 or 10 mm socket, 5.8 ft-lb, 7.8 Nm).

NOTE: To ensure proper engagement of the kick gear with the starter nut, tighten the six screws only to the point of being not extremely loose. Using one hand rotate the kick lever to ½ stroke and hold while tightening the six screws completely with the other hand.

8. Fill with oil 300 cc (10.0 oz) *Cobra 3 Shoe Clutch Milk* (Part # MCMUGF32).

Ignition

Coil removal

To remove the coil from the motorcycle, one will need to remove the spark plug cap. The cap is threaded onto the end of the coil wire. Unscrew it as if it were a bolt and a nut.

Naturally do the opposite on assembly. Align the cap and the wire, push, and turn the cap clockwise until tight.

Stator care

Stator failure could result from running the bike hot. Following is a list of things that will make your engine run hot.

1. The timing should not exceed the maximum specifications listed.
2. Improper carburetor jetting.
3. Improper spark plug heat range. Never run a hotter plug than the specified spark plug.
4. Clutch slippage. See "CLUTCH" section for causes of slippage.

CAUTION:

- Because of the amount of heat generated by the clutch and engine during extended periods of riding, it is advisable to remove the ignition cover afterward to allow the ignition to cool off. The heat transfers through the cases and can damage the stator as it cools off because of lack of airflow around the stator.
- Ignition will overheat if the gap between the rotor and stator is not large enough. There should be even clearance as the rotor rotates relative to the stator.
- Ignition timing is not adjustable. Changing the ignition timing can degrade performance.
- Make sure connections are free of dirt.

CAUTION:

Advancing the ignition timing will cause the engine to run hotter, in-turn causing power loss, shortened clutch life, and possibly lead to premature stator failure, and can also cause detonation which can lead to premature piston and ring failure.

Tools recommended for timing service:

- Compact motorcycle dial indicator (ECMU0079)
- Universal clutch puller- a universal puller that pulls the clutch, main drive gear and rotor. (Part # MCMUTL70).

CONFIRM YOUR IGNITION TIMING:

1. Remove the spark plug.
2. Insert the dial indicator into the spark plug hole.
3. Remove the four bolts from the ignition cover.
4. Turn the crankshaft counterclockwise until it reaches top dead center.
5. Set the dial indicator to zero
6. Turn the crankshaft clockwise until the dial indicator reaches 0.040” (1.0 mm) from top dead center.
7. At this position, the line on the rotor should align with the line on the stator frame. If not loosen the three 5mm bolts to adjust the stator.

ROTOR INSTALLATION:

1. Torque the nut on the rotor to 30 ft-lb (45 Nm) with medium strength (blue) thread locking agent.
2. Recheck the timing following the procedure of *timing your ignition.*
3. Install the water pump belt back on.
4. Bolt the ignition cover back on.
5. Put the spark plug back in, and firmly stick the spark plug cap onto the spark plug.

Cooling System



Radiator fluid removal:
Remove the coolant drain plug (10mm hex key) on the bottom of the engine cases.

NOTE: Inspect the old coolant for evidence of oil, combustion byproducts (black ‘oil slick’ stuff) or other things that may indicate a problem.

Tools recommended for impeller service:

- Flat head screwdriver
- 2.5mm hex key
- 3mm hex key
- 4mm hex key
- 10mm hex key
- Water Pump Installation tool - MCMUTL08B
- Slide hammer with fitting to thread into threads on end of shaft (M6x1.0)
- single and double hook ends for removing plastic impeller
- Hammer

COBRA IMPELLER SERVICE INSTRUCTIONS

1. Remove radiator cap and drain engine coolant as described above.

NOTE: If the impeller is damaged or broken completely back flush the coolant system to ensure no solid pieces are in the system.

2. Remove ignition cover and water pump cover using a 3mm hex key



3. Using a 3mm hex key, remove the screw in the water pump shaft stop hole.

4. Stick a 2.5mm hex key in the water pump shaft cross hole, and remove belt retainer screw using a 4mm hex key. (Figure 41 - item 1)

5. Remove belt retainer, water pump belt and water pump fan pulley.

6. Remove bearing retainer screw using a 3mm hex key.

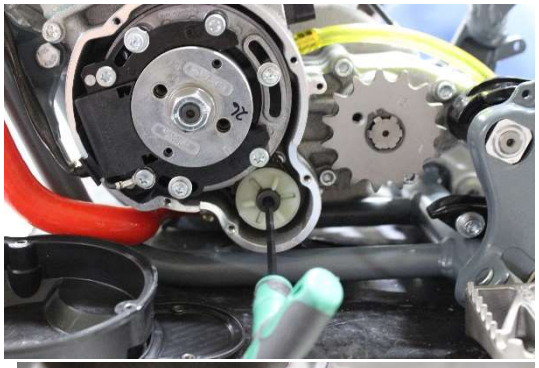

7. Thread a slide hammer onto the end of the water pump shaft and remove the assembly.

8. Clean any debris or particles from the bore and use some light emery cloth to remove any scratches in the surface that the removal process may have created.

9. Lubricate the bore with grease.



10. Prepare for assembly by installing the water pump assembly into the assembly tool and align the tool with engine case making sure alignment pin is in proper hole.

CAUTION:
Damage may occur if one attempts to install the water pump assembly and it's not aligned correctly in the bore.

11. Holding the tool squarely over the water pump assembly tap it firmly into place.

12. The assembly is installed properly when the retaining screw can be tightened and it does not cause a bind on the spinning shaft (use medium strength thread lock on the retainer screw).

NOTE: It may be necessary to tap the outer bearing race in (hammer & blunt punch) or out (with slide hammer) to insure proper free operation of the shaft while the screw is tight.

13. Reinstall the pulley, belt and fan cover using a 2.5mm hex key to stop the rotation of the water pump assembly while tightening with medium strength thread lock to 10 ft-lb (14Nm).
14. Reinstall the covers

NOTE: Refill the coolant system with 50/50 antifreeze-coolant / distilled water.

CAUTION:
Do not mix Propylene Glycol based coolant / antifreeze solutions with Ethylene Glycol based coolant / antifreeze solutions.

Fuel & Air System

Carburetor

Tools recommended for carburetor service:
- Small flat head screwdriver
- WD-40
- 8mm socket

Your Cobra is equipped with an adjustable carburetor. Some fine-tuning may be needed according to weather condition and altitude. Proper jetting is ***very*** important for engine performance and engine life. Serious damage to the engine can occur if not properly adjusted.

IDLE ADJUSTMENT:
On the left side of the carburetor, there are two adjustment screws. The larger screw with the knurled head is the idle adjustment screw. To raise the idle, turn the screw in clockwise (in 1/4 turn increments) and rev the engine after each adjustment. To lower the idle, turn the screw counter-clockwise.

TOP END JETTING:
Indications that the engine is running too rich (too much fuel for the air) are:

- Engine not revving out or blubbering at high RPMs.
- Engine will not 'clean out'
- Wet or black spark plug

NOTE: Before changing jetting be sure that the air filter is properly cleaned and has the usual amount of air filter oil. An overly dirty air filter can cause the engine to run rich.

If the engine is running rich on the top end it should be leaned out. Leaning it out can be done by:

1. Changing the main jet to a smaller number.
2. Raising the needle clip (this lowers the jet needle) one notch at a time on the slide.

Indications that the engine is running too lean are:

- Engine cutting out on top end.
- Engine overheating and ultimately seizure.
- White spark plug

CAUTION:
It is much safer to operate the engine slightly rich as opposed to slightly lean. This is because an overly rich engine will just run poorly while an overly lean engine will seize, potentially causing an expensive top end rebuild and a DNF.

To richen the carburetor:

1. Change the main jet one number at a time (larger).
2. Lower the needle clip (raising the jet needle) one notch at a time until the engine starts to blubber on the top end, then move the clip back up one notch or until you get the blubber out.

FUEL MIXTURE SCREW
The smaller brass screw that is towards the front of the engine is a fuel mixture screw. This screw will also richen and lean your engine more on the bottom and mid-range. In warmer conditions, turn the screw in. In colder conditions, turn the screw out. Be sure to keep the carburetor very clean and make sure you don't have water or dirt in the carburetor bowl. Use automotive carburetor cleaner or WD-40 to clean the carburetor inside and out.

Cleaning the carburetor:

⚠ WARNING
Clean the carburetor in a well-ventilated area, and take care that there is no spark or flame anywhere near the working area; this includes any appliance with a pilot light. Because of the danger of highly flammable liquids, do not use gasoline or low flash-point solvent to clean the carburetor.

1. Make sure the fuel is shut off and remove the carburetor
2. Remove the carburetor.
3. Drain the fuel from the carburetor.
4. Disassemble the carburetor.
5. Immerse all the metal parts in a carburetor cleaning solution.
6. After the parts are cleaned, dry them with compressed air.
7. Blow out the fuel passages with compressed air.
8. Assemble the carburetor
9. Install the carburetor onto the motorcycle.

CAUTION:
The motorcycle will only operate properly if the carburetor top is installed properly with the mounting screws, cable and choke knob oriented as shown in figure 45.

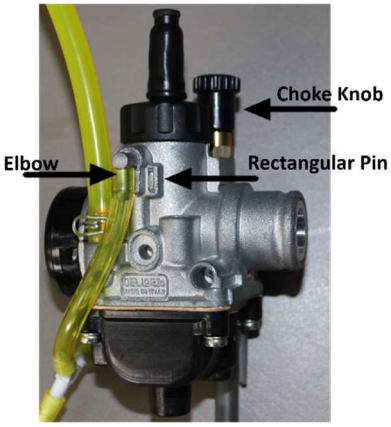

Figure 45: Proper carburetor top installation and location of rectangular slide indexing pin and vent elbows.

Reeds

- The reeds must lay flat on the reed cage.
- If the reed tips aren't lying flat, replace them immediately.
- The reeds must have a tight seal on the reed cage.
- If the reed is damaged in any way, replace it. This means cracks, chips, and ruptures. Anything abnormal, replace the reeds.

Take the reed cage out and hold it up to the light and look in through the cage. If you see light between the reed pedals and the frame, then replace the reeds. If you do not see light, then the reeds should be ok.

Exhaust

The pipe is a crucial element to a motorcycle. Any kinks, dents, or damage done to the pipe will result in a major performance loss.

NOTE: Be sure to take the pipe off, and any carbon that may be built up. Carbon build up is created from exhaust. Exhaust has oils in it, and the oils cling to the walls of the inside of the pipe. Over a long period of time, the diameter of the pipe will decrease, due to carbon build up. So it is essential to clear the residue.

CAUTION:
It is important to repack the silencer. Signs of your silencer needing to be repacked are:
- The bike is louder than normal.
- A loss of power.

Rear wheel pullers

Disassembly:

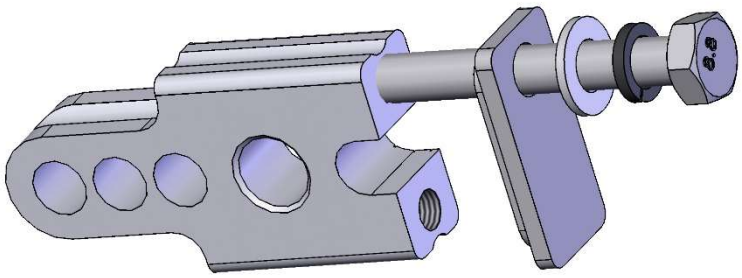

1. Remove axle, and back wheel assembly.
2. Pull the rear wheel pullers out of the back of the swing arm.

Rear wheel alignment:

Either

- Accurately measure the distance from the swingarm pivot to the axle center on each side or
- From the rear of the bike, sight up through both sprockets to ensure that the chain is running in a straight line (no bend in between or jog at either sprocket).

Brakes

Check before each ride:

- Make sure the brake does not have any leaks by holding the lever in while checking hose connections.
- Make sure the brake lever pressure is OK by pulling in on the lever and ensuring full braking performance is achieved before the lever touches the handlebar. If this is not the case, pump the lever several times until the lever feels firm.
- Always make sure the rotor and brake pads are free from oil and grease. Clean the rotor with mild dish soap or alcohol. Contaminated pads must be replaced.
- Ensure that the brake caliper is centered over the brake rotor. It a correction is needed, Cobra has thin brake shims to help make minor adjustments in alignment.
- Always leave adequate free-play in the lever or pedal.

CAUTION:
This brake system uses only DOT 4 brake fluid!

Front Forks

Tools recommended for front fork service:

- Flat head screwdriver
- Hammer
- Pick
- Seal driver MCMUTL02
- 9/16” (loose 14 mm) wrench
- 25mm wrench or socket
- 5 wt fork oil

FORK DISASSEMBLY PROCEDURES:

- Using the 25mm wrench, remove the fork cap.
- Drain the fork oil into a suitable container.
- Disconnect the fork cap from the damper rod (9/16” wrench & 25mm wrench).
- Disconnect the damper assembly from the fork leg by removing the large aluminum bolt from the bottom of the fork leg (22mm wrench).
- Pry the dust seal (swiper) from its position with a small screw driver.
- Using a pick, remove the wire retaining ring holding the fork seals into place.
- ‘Pop’ the fork seal out by forcibly pulling on both ends of the fork tube assembly, thus separating the inner from the outer tube.
- Remove the bushings
- Clean all components to be reused.

FORK ASSEMBLY PROCEDURES:

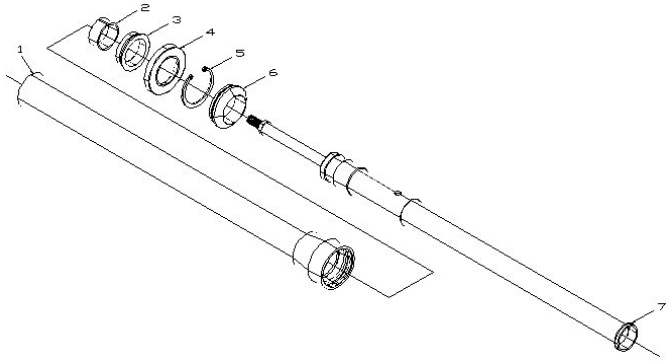

CAUTION:
Make sure all components are clean before assembly.

CAUTION:
Be sure to apply oil to the new fork seal and other components before installing.

1. Slide dust seal (swiper) (#6) onto lower fork leg.
2. Slide retaining ring (#5) onto lower fork leg.
3. CAREFULLY slide seal (#4) onto lower fork leg with spring facing away from snap ring.

CAUTION:
It is helpful to cover the sharp corners of the fork leg with tape or thin plastic before sliding on the new seal. Also take care that the inner lip is not folded over when installing.

4. Slide bushing (#3) onto lower fork leg.
5. Install the glide ring into groove on lower fork leg.
6. Slide the bushing over the glide ring about 1/4" to hold the glide ring in the groove.
7. Insert the lower leg assembly into the upper fork tube about 5-6".
8. Use a seal driver to drive the seal into the upper tube.
9. Install the retaining ring. Make sure it is properly seated in the groove.
10. Snap the dust seal (swiper) into the groove in the upper tube.
11. Reinstall the damper cartridge assembly to the fork leg. Secure the large bolt with 22 mm wrench to 35 ft-lb with green thread locking agent.
12. Fill with 4.7 oz (140 ml) 2.5 wt fork oil should measure 6 mm (0.25”) above the damper cartridge tube with spring removed. (This oil volume works out to leave an oil height of 120mm from top of outer tube with forks collapsed, damper rod down, and spring removed).
13. Install the fork spring
14. Connect the cartridge rod to the cap and tighten to 12 ft-lb (16 Nm).

CAUTION:
The damper rod is hollow and will break if the nut is over tightened (proper torque is 12 ft-lb, 16 Nm).
Because of different rider weights, sizes and riding styles, we offer various suspension options:

See *Optional Components* section of this manual for details on these and other optional components for your Cobra Motorcycle.

Rear Shock

The rear shock is fully serviceable but it is recommended that only trained professionals should service your shock. Contact Cobra for questions and service of your CX50 SR shock.

Condition	Gear Taller	Gear Lower
Mud		↓ ↓
Sand		↓
Hills		↓
Hard Pack	↑	
Throttle Blipper (novice)*		↓ *

Gearing

For a bike with a centrifugal clutch, it's better to be geared too low than too high.

What happens with improper gearing?

- Poor performance
- Not enough top end speed
- No snap
- Over heat clutch
- Premature failure of engine seals, bearings, & electronics
- High clutch wear

Front Sprocket				Rear	Ratio
			16	33	2.06
		15		31	2.07
			16	34	2.13
		15		32	2.13
			16	35	2.19
		15		33	2.20
	14			31	2.21
			16	36	2.25
		15		34	2.27
	14			32	2.29
			16	37	2.31
		15		35	2.33
	14			33	2.36
			16	38	2.38
		15		36	2.40
	14			34	2.43
			16	39	2.44
		15		37	2.47
	14			35	2.50
			16	40	2.50
		15		38	2.53
	14			36	2.57
		15		39	2.60
	14			37	2.64
		15		40	2.67
13				35	2.69
	14			38	2.71
13				36	2.77
	14			39	2.79
13				37	2.85
	14			40	2.86
13				38	2.92

Suspension

Adjustment

1. Front forks
    - 1.1. Fork oil
        - 1.1.1. Oil type
            - 1.1.1.1. Heavier weight oil – more damping – slower responding
            - 1.1.1.2. Lighter weight oil – less damping – quicker responding
        - 1.1.2. Oil quantity / level
            - 1.1.2.1. Greater quantity / higher level – greater bottoming resistance, stiffer near the end of the travel.
            - 1.1.2.2. Smaller quantity / lower level – less bottoming resistance, less stiff near the end of the travel.
    - 1.2. Fork spring
        - 1.2.1. Stiffer spring (higher spring rate) – stiffer throughout the travel.
        - 1.2.2. Less stiff spring (lower spring rate) – less stiff throughout the travel.
    - 1.3. Gas pressure – always bleed off any pressure.
    - 1.4. Fork height
        - 1.4.1. Rise in clamps for quicker turning.
        - 1.4.2. Lower in clamps for improved straight line stability.
    - 1.5. Compression damping
        - 1.5.1. Harder (more damping, slower) – adds resistance to the suspension motion when the suspension is compressing.
        - 1.5.2. Softer (less damping, quicker) – reduces resistance to the suspension motion when the suspension is compressing
    - 1.6. Rebound damping
        - 1.6.1. Harder (more damping, slower) – adds resistance to the suspension motion when the suspension is returning to full length.
        - 1.6.2. Softer (less damping, quicker) – reduces resistance to the suspension motion when the suspension is returning to full length

It may be helpful to set up the clutch to hit early for smooth power delivery

2. **Rear shock**
    - 2.1. Preload adjustment
        - 2.1.1. More preload (greater distance) – less race sag.
        - 2.1.2. Less preload (smaller distance) – more race sag.
    - 2.2. Shock spring
        - 2.2.1. Stiffer spring – stiffer throughout the travel.
        - 2.2.2. Less stiff spring – less stiff throughout the travel.
    - 2.3. Compression damping
        - 2.3.1. Harder (more damping, slower) – adds resistance to the suspension motion when the suspension is compressing.
        - 2.3.2. Softer (less damping, quicker) – reduces resistance to the suspension motion when the suspension is compressing.
    - 2.4. Rebound damping
        - 2.4.1. Harder (more damping, slower) – adds resistance to the suspension motion when the suspension is returning to full length.

2.4.2. Softer (less damping, quicker) - reduces resistance to the suspension motion when the suspension is returning to full length

Front Fork Operation

The front suspension on the CX50SR works under the principals of hydraulic damping, and it features full adjustability to help tune the fork to meet each rider's needs. The CARD fork contains MXT 'Smart Leg' technology that provides very progressive operation; allowing a small bike to perform well on track surfaces ripped up by larger machines.

The key to Smart Leg technology is to understand that each leg has a different role. The brake side leg features a conventional open cartridge. This cartridge handles both standard compression and rebound damping duties. Rebound damping is adjustable on the fork cap, and compression damping is adjusted at the bottom of the fork. The other leg (the Smart Leg) has no rebound damping, and it contains both a speed sensitive compression damping mechanism as well as a position sensitive one. This design allows for a firm low speed response, controlling rapid chassis pitch, which promotes stability and control. The fork produces significantly less mid and high-speed compression until it travels into the progressive / speed sensitive portion of the smart leg. The speed sensitive compression component is adjustable at the top of the fork.

The combination of the Smart Leg and the conventional leg allows the fork to be very supple throughout all low amplitude operation and yet take punishing hits; producing a progressively increasing damping rate that slows the forks movement as it approaches full bottom. Therefore, the Smart Leg also acts as a hydraulic bottoming control device. Finally, the large degree of adjustability in both legs allows the fork to be tuned to meet each rider's size, ability, and type of riding they do (motocross, off-road, flat track, etc).

Fork Damping Adjustments

Tools required

- Small flat blade screwdriver



REBOUND ADJUSTMENT

The speed at which the fork rebounds can be adjusted at the top of the conventional leg. Turning the adjustment screw clockwise slows the rate at which the fork extends after being compressed, and likewise, turning the screw counter-clockwise returns the leg to its extended position faster. As shown in the figure, ‘S’ (slower) and ‘F’ (faster) are etched into the cap as an adjustment guide.



COMPRESSION ADJUSTMENT

At the base of the conventional leg is another adjustment screw that controls the amount of compression damping. Turning this screw clockwise increases damping and turning it counter-clockwise will decrease it. This is illustrated by the “HARD” and “SOFT” in the figure at the right.



BOTTOMING ADJUSTMENT

The Smart Leg cap is labeled “Speed Sensitive Bottoming Control”, and this adjuster provides a range of control over how progressive the fork feels. Turning the screw clockwise increases the fork’s resistance to bottoming, while turning the screw counter-clockwise decreases it. On the track, this effect will be felt on sections where the fork is forced to move very quickly such as on harsh landings or when traversing sharp edged bumps.

Symptom	Action
Rear end feels stiff on small bumps	Softer compression damping
Rear end ‘sways’ on straights	Harder compression damping
Bike tends to jump ‘rear end high’	Harder rebound damping
Bike tends to jump ‘rear end low’	Softer rebound damping
Frequent rear end bottoming	Harder compression damping
Bottoms after end of continuous bumps	Softer rebound damping
Rear end ‘kicks’ over square edge bumps	1) Harder rebound, 2) Softer Compression

Rear Shock Adjustments

Always start with standard settings and make damping changes in no more than two click increments and only make one change at a time.

Symptom	Action
Rear end feels stiff on small bumps	Softer Low Speed Compression Damping
Rear end ‘sways’ on straights	Harder Low Speed Compression Damping

Bike tends to jump ‘rear end high’	Harder High Speed Compression
Bike tends to jump ‘rear end low’	Softer High Speed Compression
Frequent rear end bottoming	Harder Compression Damping
Bottoms after end of continuous bumps	Softer rebound damping
Rear end ‘kicks’ over square edge bumps	1) Harder rebound, 2) Softer Low and High Speed Compression
Rear end feels stiff under acceleration bumps.	Softer Rebound and/or Stiffer Low Speed Compression Damping

Proactive Suspension Adjustments

Once you have the suspension adjusted for decent overall feel, you can make proactive adjustments when faced with different racing conditions.

Situation	Actions
Sand track	Lower the rear end (increase race sag).
Sand track	Stiffer compression and rebound damping.
Long fast track	Lower the forks in the clamps by 3 mm.
Tight slow track	Raise the forks in the clamps by 3 mm.
Mud track	Lower the bike if the rider has difficulties touching the ground.

Shock preload

Loosen the set screw and turn the spring perch in full turn increments to get the desired sag settings.

NOTE:
Always leave the spring perch rotated in such position so that the set screw is easily accessible.

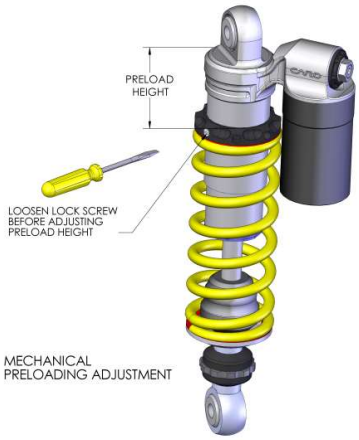

Shock Damping



11. Adjustment of rebound damping



12. Adjustment of compression damping

Carburetion

Although your Cobra is sent from the factory with the carburetor jetted for optimal performance, you may find it necessary to adjustment your particular jetting due to current weather conditions, altitude, fuel variations, and/or engine modifications.

CAUTION:
Proper jetting is very important for engine performance and engine life. Symptoms of improper jetting are listed below.

- Symptoms of incorrect oil or oil / fuel ratio
  - Poor acceleration
  - Misfire at low engine speeds
  - Excessive smoke
  - Spark plug fouling
  - Excessive black oil dripping from exhaust system
- Symptoms of too rich a fuel mixture
  - Poor acceleration
  - Engine will not 'rev' out, blubbers on top
  - Misfire at low engine speeds
  - Excessive smoke
  - Spark plug fouling
  - Wet, black, or overly dark spark plug (when removed for inspection)
- Symptoms of too lean a fuel mixture
  - Pinging or rattling
  - Erratic acceleration
  - Same actions as running out of fuel
  - High engine temperature
  - White spark plug (when removed for inspection)

NOTE: When inspecting the spark plug to evaluate jetting, a properly jetted machine will produce a spark plug that is dry and light tan in color.

Environmental and altitude related mixture adjustments		
Condition	**Mixture will be**	**Required adjustment**
Cold air	Leaner	Richer
Warm air	Richer	Leaner
Dry air	Leaner	Richer
Very humid air	Richer	Leaner
Low altitude	Standard	None
High altitude	Richer	Leaner
Low barometric pressure	Richer	Leaner
High barometric pressure	Leaner	Richer

NOTE: Before making any carburetor jetting changes verify that:
- You are using the proper fuel and oil

- The fuel is fresh and uncontaminated
- The oil and fuel have been mixed in the proper ratio
- The carburetor is clean (no plugged jets)
- The air filter is properly clean and oiled
- The float height is within proper specification (proper measuring technique is described later in this section)

NOTE: Perform all jetting changes on a motorcycle that has been warmed up to proper operating temperature.

The carburetor on your Cobra motorcycle is quite adjustable. Figure 59 shows its range of adjustment and in particular what adjustable component affects what range of operation (specifically throttle position).

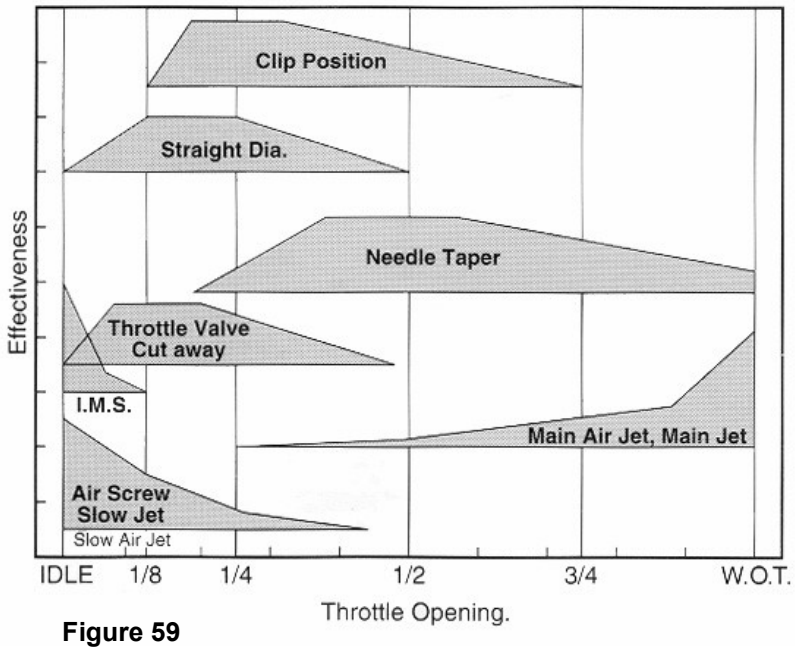

Figure 59

FUEL SCREW ADJUSTMENT: Adjust for maximum idle speed
The fuel adjustment screw is located on the left side of the carburetor. It is the smaller of the two adjustment screws and requires the use of a small flat blade screwdriver for adjustment. After adjusting for maximum idle speed, use the idle screw to adjust the desired idle speed.

NOTE: If the fuel screw requires more than 3 turns out, replace the pilot jet for one that is one size richer (larger number) then re-adjust the fuel screw.

IDLE ADJUSTMENT: Adjust for desired idle speed
The idle speed screw is located on the left side of the carburetor. It is the larger of the two screws on the side of the carburetor and is unique with its knurled head for easy fingertip adjustment. To raise the idle, turn the screw in, clockwise, (in 1/4 turn increments) and rev the engine after each adjustment. To lower the idle, turn the screw counter-clockwise.

TOP END JETTING: Adjust for clean full throttle acceleration
Jet your top end (main jet) based on the acceleration of your Cobra Motorcycle on the longest straight at the track. Observe any of the lean or rich symptoms (spark plug appearance and bike performance) listed above and change your jetting accordingly.

PART THROTTLE **Adjust for desired acceleration**

Using an area of the track that allows the rider to operate and mid throttle and transition (accelerate, or 'roll on') from closed, or mostly closed throttle, to a larger throttle opening. Observe the rich and lean symptoms listed above. Adjust the jet needle position by moving the clip from its current position (move the clip higher on the needle to make the bike run leaner, or move the clip lower on the needle to make the bike run richer) to one higher or lower.

Troubleshooting

1) **Engine not behaving properly**
   a) The carburetor slide indexing pin is missing
   b) Wrong spark plug installed (8339 Champion to be used on '04 or later & no mods)
   c) Needle clip is on top of plastic not below
   d) Air leak – find where with carb cleaner or similar
   e) Ground wire or ignition leads have fault
2) **Engine is down on power**
   a) Clutch engagement is not set properly
   b) Jetting is incorrect
   c) Silencer needs repacked
   d) Exhaust pipe
      i) Has excess carbon buildup
      ii) Has large dent in it
   e) Compression is low
      i) Piston
      ii) Rings
   f) Reeds are damaged
   g) Ignition timing is incorrect
3) **Engine is excessively loud**
   a) Silencer needs to be repacked
4) **Engine cuts out at high RPMs**
   a) Stator bad
   b) Carburetor diffuser plate upside down (install like a skirt)
   c) Plugged fuel petcock
   d) Silencer core tube broken

5) **Engine won't start**
   a) Fuel
      i) None in tank
      ii) Is sour or bad
   b) Carburetor is dirty
   c) Ignition
      i) Spark plug fouled
      ii) Wrong spark plug installed (8339 Champion to be used on '04 or later & no mods)
      iii) Spark plug cap off
      iv) Engine Shut-off 'kill' switch is shorted
      v) Bad electrical ground
      vi) Stator winding damaged
   d) Exhaust is plugged

6) **Overheating**
   a) Bad stator
   b) Water pump pulleys or belt broken
   c) Water pump impeller broken or bolt out
   d) Jetting too lean
   e) Too much throttle blipping
   f) Too high gearing
   g) Kinked radiator hose
   h) Rear brake dragging
   i) Chain too tight
   j) Air leak

7) **Engine won't idle**
   a) Idle knob needs adjusted
   b) Air leak
   c) Carburetor jets are dirty

Change Control

Who	Rev	Date Pub	Assy/pg	Changes made
PDM	1	10/22/24	REAR BRAKE	CORRECTED REAR MASTER & BRAKE SYSTEM
PDM	2	NOT YET	BODYWORK	Side number plate mounting with HCBC05x14 was 5x20
PDM	2		exhaust	Added 2nd pipe mount
PDM	2	11/12/24	Shock page	Shock bolt to HCBF1039 from HCBF1040
PDM	3	Not yet	Rear brake	Changed back rear master and complete system
PDM	3		Rear wheel	Sprockets to 35 -40
JC	3		exhaust	Added alignment bullet & grommet
PDM	3		Springs	Realigned shock spring with rider weight
PDM	3	1/15/25	Torque spec	Aluminum front axle bolt from 25 Nm to 12-15 Nm
PDM	4	1/20/25	Shock springs	Correct colors of 255 & 265 #/in springs in chart
PDM	5	not	Rear brake	Rear hose was BCMU0047 switched to BCMU0061B
PDM	6		service	Ring end gap from .008” to .010”
BB	7	7/8/25	Rear brake	Switched brake spring from BCMUSP02 to BCMUSP01